GEN 5 EDGE SERIES
SOLAR HYBRID INVERTER

USER MANUAL

E-EDG12KW400V-IP65 | E-EDG20KW400V-IP65



This manual applies to the EURONET GEN 5 Edge Series Solar Hybrid Inverter, LV Three-Phase, covering the 12KW (E-EDG12KW400V-IP65) and 20KW (E-EDG20KW400V-IP65) models. It describes the mounting, electrical connection, system operation, user interface, commissioning, maintenance, and technical specifications of the inverter. Please read this manual and any related documents carefully before installing or operating the product, and keep it accessible to installation, operation, and maintenance personnel at all times. Installation must be carried out by professional electrical engineers holding relevant qualifications.

euronet.co
ISO 9001: 2015 CERTIFIED COMPANY

History

Version	Issued	Comments
V1.0	15-Sep.-25	First release.
V1.1	12-Nov.-25	Update the mounting bracket, handles, the number of expansion bolts and the direction of PV terminals.
V1.2	24-Nov.-25	Update the mounting bracket and handles.
V1.3	08-Dec.-25	Update the cover. Update the silkscreen of the battery terminals and I/O board. Add parallel connection wiring diagram in Chapter 4.1 Wiring Diagram. Add Chapter 4.7.2 Parallel Communication Connection and Chapter 4.7.7 Meter Connection. Update 9. Technical Specifications.

Preface

Purpose

This manual describes the mounting, electrical connection, system operation, user interface, commissioning, maintenance and technical specification etc. of energy storage system (ESS) inverter. Please first read the manual and related documents carefully before using the product and store them in a place where installation, operation and maintenance personnel can reach at any time. The illustrations in this user manual are for reference only. This user manual is subject to change without prior notice. (Specific please in kind prevail.)

Scope

This manual is applicable to following inverter models:

- 6K
- 8K
- 10K
- 12K
- 15K
- 20K

Target Group

Inverters must be installed by professional electrical engineers who have obtained relevant qualifications.

Symbol Conventions

The following safety instructions and general information are used within this user manual.

DANGER	Indicates an imminently hazardous situation which, if not correctly followed, will result in serious injury or death.
WARNING	Indicates a potentially hazardous situation which, if not correctly followed, will result in serious injury or death.
CAUTION	Indicates a potentially hazardous situation which, if not correctly followed, could result in moderate or minor injury.
NOTICE	Indicates a potentially hazardous situation which, if not correctly followed, could result in equipment failure to run, or property damage.
NOTE	Call attention to important information, best practices and tips: supplement additional safety instructions for your better use of the ESS inverter to reduce the waste of you resource.

Table of Contents

1. Safety 4
   1.1 Symbols Used 4
   1.2 Safety Precaution 5
2. Product Introduction 6
   2.1 Overview 6
   2.2 Declaration for Off-Grid Function 7
   2.3 Appearance and Dimensions 8
3. Mounting 9
   3.1 Packing List 9
   3.2 Mounting Requirements 10
      3.2.1 Environment Requirements 10
      3.2.2 Angle Requirements 11
      3.2.3 Clearance Requirements 11
   3.3 Mounting the Inverter 12
4. Electrical Connection 14
   4.1 Wiring Diagram 14
   4.2 External Grounding Protection Connection 18
   4.3 Cover Removing 19
   4.4 Battery Connection 20
   4.5 PV Connection 21
   4.6 GRID/GEN/BACKUP Connection 22
   4.7 Communication Connection 23
      4.7.1 DI/DO/NTC/RSD Connection 24
      4.7.2 Parallel Communication Connection 26
      4.7.3 CT Connection 28
      4.7.4 BMS Connection 31
      4.7.5 DRMS Connection 34
      4.7.6 RS485 Connection 36
      4.7.7 Meter Connection 38
      4.7.8 Wi-Fi/LAN Module Connection 40
   4.8 Cover Installation 40
5. System Operation 41
   5.1 Inverter Working Mode 41
      5.1.1 Self-Consumption Mode 41
      5.1.2 Feed-in Priority Mode 43
      5.1.3 Back-up Mode 45
      5.1.4 Forced Charge/Discharge Function 47

5.1.5 Off-Grid Mode 47
5.1.6 On-Grid Unbalanced Output 48
5.1.7 Back-up Unbalanced Output 49
5.2 Startup/Shutdown Procedure 50
5.2.1 Startup Procedure 50
5.2.2 Shutdown Procedure 51
6. Commissioning 52
6.1 Inspection 52
6.2 Commissioning Procedure 52
7. User Interface 53
7.1 LED 53
7.2 LCD 54
7.2.1 Main Menu 54
7.2.2 Quick Setup 55
7.2.3 Graph 57
7.2.4 Settings 58
7.3 App 70
8. Maintenance 71
8.1 Routine Maintenance 71
8.2 Inverter Troubleshooting 71
8.3 Removing the Inverter 77
9. Technical Specifications 78

1. Safety

Before using the inverter, please read all instructions and cautionary markings on the unit and in this manual. Put this manual to a place where you can take it easily.

Our ESS inverter strictly conforms to related safety rules in design and test. Please follow the local laws and regulations during installation, operation and maintenance. Incorrect operation may cause injury or death to the operator or a third party, and damage to the inverter and other properties belonging to the operator or a third party.

1.1 Symbols Used

The following safety symbols and general information are used on the inverter.

Safety Symbol	Description
	Danger of high voltage! Only qualified personnel may perform work on the inverter.
	Residual voltage exists after the inverter is powered off. It takes 5 minutes for system to discharge to a safe voltage.
	Danger of hot surface
	Do not disconnect under load, otherwise there will be a danger of fire.
	Environmental Protection Use Period (years)
	Refer to the operating instructions
	Don't dispose of the inverter with the household waste.
	Grounding terminal

1.2 Safety Precaution

- Installation, maintenance and connection of inverters must be performed by qualified personnel, in compliance with local electrical standards, wiring rules and requirements of local power authorities and/or companies.
- The temperature of some parts of the inverter may exceed 60°C during operation. Do not touch the inverter during operation to avoid being burnt.
- Ensure children are kept away from inverters. Don't open the front cover of the inverter. Apart from performing work at the wiring terminal (as instructed in this manual), touching or changing components without authorization may cause injury to people, damage to inverters and annulment of the warranty.
- Static electricity may damage electronic components. Appropriate methods must be adopted to prevent such damage to the inverter, otherwise the inverter may be damaged and the warranty annulled.
- Ensure the output voltage of the proposed PV array is lower than the maximum rated input voltage of the inverter, otherwise the inverter may be damaged and the warranty annulled.
- When exposed to sunlight, the PV array generates dangerous high DC voltage. Please operate according to our instructions, or it will result in danger to life.
- PV modules should have an IEC61730 class A rating.
- If the equipment is used in a manner not specified by the manufacturer, the protection provided by the equipment may be impaired.
- Completely isolate the inverter before maintaining. Completely isolating the inverter should turn off the PV switch and disconnect the PV terminal, battery terminal, and AC terminal.
- After the inverter is powered off, the remaining electricity and heat may still cause electric shock and body burns. Do not touch parts of inverter for 5 minutes after disconnection from the power sources.
- Prohibit inserting or pulling the AC and DC terminals when the inverter is running.
- In Australia, the inverter internal switching does not maintain the neutral continuity. And neutral integrity must be addressed by external connection arrangements.
- Don't connect ESS inverter in the following ways:

  The BACKUP Port should not be connected to the grid.

  A single PV panel string should not be connected to two or more inverters.

2. Product Introduction

2.1 Overview

The ESS inverters are high-quality inverter which can convert solar energy to AC energy and store energy into battery. Typically, an ESS inverter system consists of PV array, ESS inverter, battery, loads and electricity sensor.

The energy generated by inverter can be preferentially supplied to its self-consumption, stored in the battery for future use or fed into public grid.

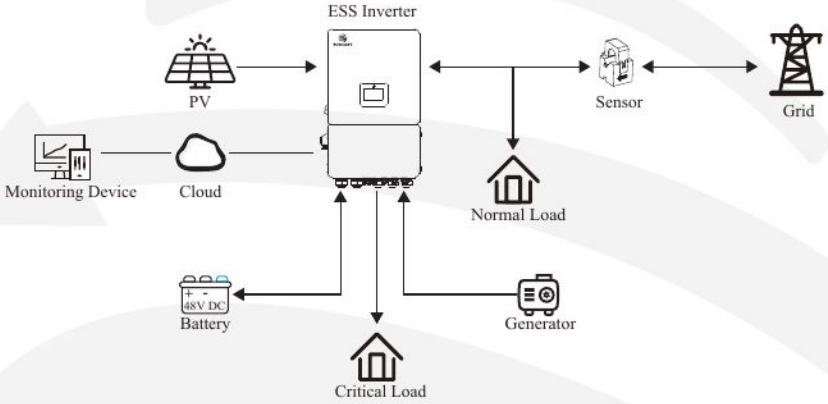

2.2 Declaration for Off-Grid Function

The following statement involves our company general policies about the hybrid inverters described in this document.

- For hybrid inverters, the electrical installation typically includes connection of the inverter to both PV modules and batteries. If there is no available power from batteries or PV modules in off-grid mode, the backup power supply will be automatically terminated. Our company shall hold no liability for any consequences arising from failing to observe this instruction.
- Normally, the back-up switching typical time is 10 ms. However, some external factors may cause the system to fail on off-grid mode. Therefore, the users must be aware of conditions and follow the instructions as below:
  - ➢ Do not connect loads that are dependent on a stable energy supply for a reliable operation.
  - ➢ Do not connect the loads whose total capacity is greater than the maximum back-up capacity.
  - ➢ Do not connect the loads that may cause very high start-up current surges, such as airconditioner, high-power pump, vacuum cleaner, and hair drier.
  - ➢ Due to the condition of the battery itself, battery current might be limited by some factors, including but not limited to the temperature and weather.

Declaration for Off-Grid Overload Protection

The inverter will restart in case of overload protection. The time required for restarting will be 3 mins if overload protection repeats. After the cumulative overload times up to three, the inverter will be locked. You can unlock the inverter by holding the button for 1s to clear the overload alarm. Try to reduce backup load power within maximum limitation or remove the loads which may cause very high start-up current surges.

2.3 Appearance and Dimensions

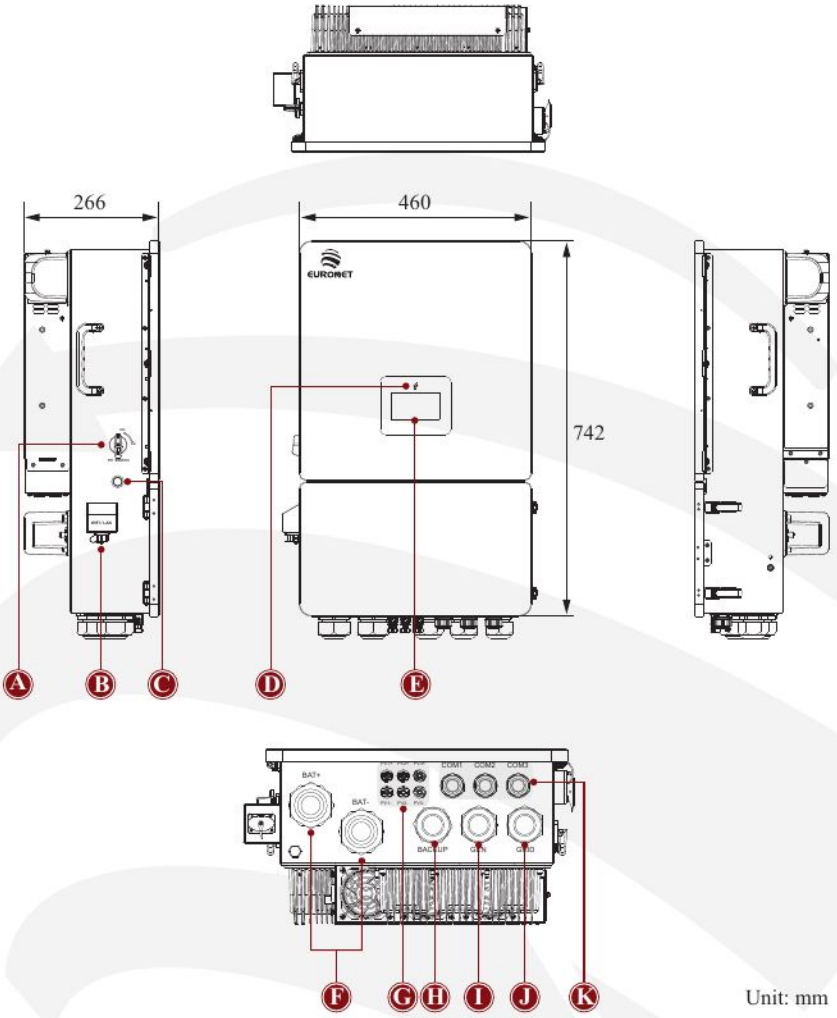

Unit: mm

Number	Description	Number	Description
A	PV switch	F	Battery connection ports
B	WIFI/LAN port	G	PV connection terminals
C	ON/OFF button	H	BACKUP connection port
D	LED indicator	I	GEN connection port
E	LCD screen	J	GRID connection port
		K	Communication connection ports

3. Mounting

3.1 Packing List

After unpacking, please check the following packing list carefully. If any damage or missing parts occurs, contact the supplier for help.

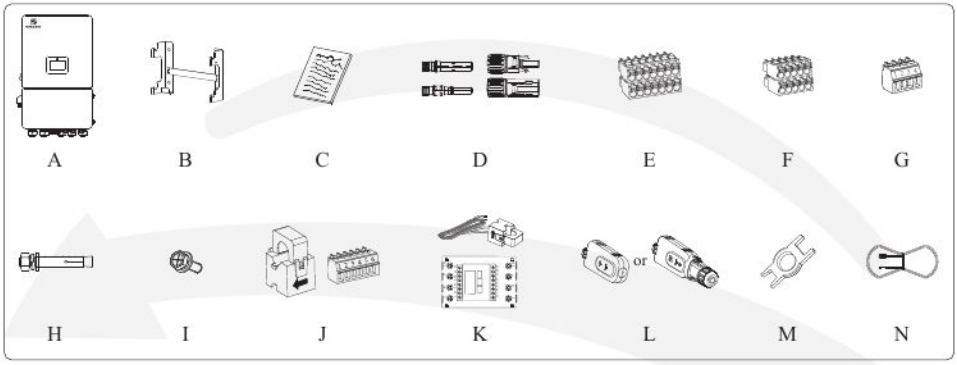

Number	Quantity	Description
A	1	Inverter
B	1	Mounting bracket
C	1	File package
D	3/3	PV connector group (PV+/PV-)
E	1	14-Pin terminal
F	1	10-Pin terminal
G	2	4-Pin terminal
H	4	M10 Expansion bolt
I	1	M4 Security screw
J	1	CT pack (3pcs. CT + 1pc. 6-Pin terminal)
K	1	Meter pack (3pcs. CT + 1pc. meter) (Optional)
L	1	Wi-Fi/LAN module (Optional)
M	1	Removal tool for PV connector
N	1	Lead-acid battery temperature sensor (Optional)

3.2 Mounting Requirements

3.2.1 Environment Requirements

a. With an IP65 protection rating, the inverter can be mounted indoors or outdoors.

b. The mounting location must be inaccessible to unrelated personnel since the enclosure and heat sinks are extremely hot during operation.

c. Do not install the inverter in areas containing highly flammable materials or gases.

d. To ensure optimum operation and long service life, the ambient temperature must be below 50°C.

e. The inverter must be mounted in a well-ventilated environment to ensure good heat dissipation.

f. The carrier where the inverter is mounted must be fire-proof. Do not mount the inverter on flammable building materials.

g. Do not install the inverter in a rest area since it will cause noise during operation.

h. The installation height should be reasonable, and please make sure it is easy to operate and view the display.

i. Product label and warning symbols shall be clear to read after installation.

j. To ensure long service life, the inverter must not be exposed to direct solar irradiation, rain, or snow. It is recommended that the inverter be mounted in a sheltered place.

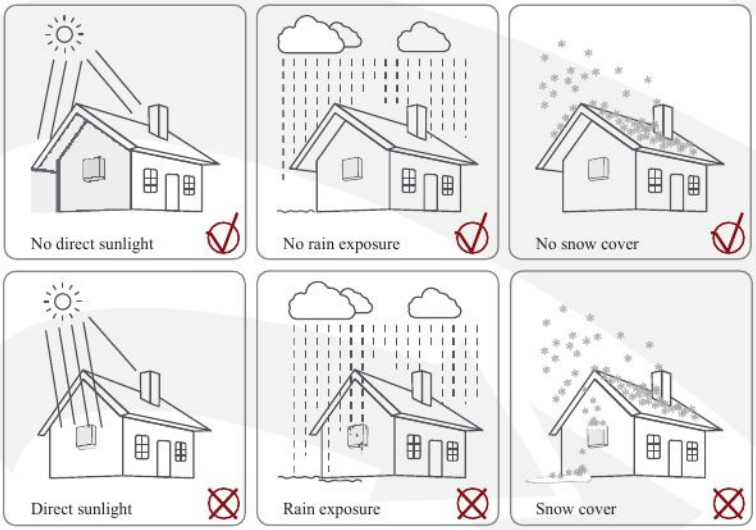

3.2.2 Angle Requirements

Mount the inverter vertically or at a maximum back tilt of 15°. Do not install the inverter in a wrong direction. Always keep the connection area downward.

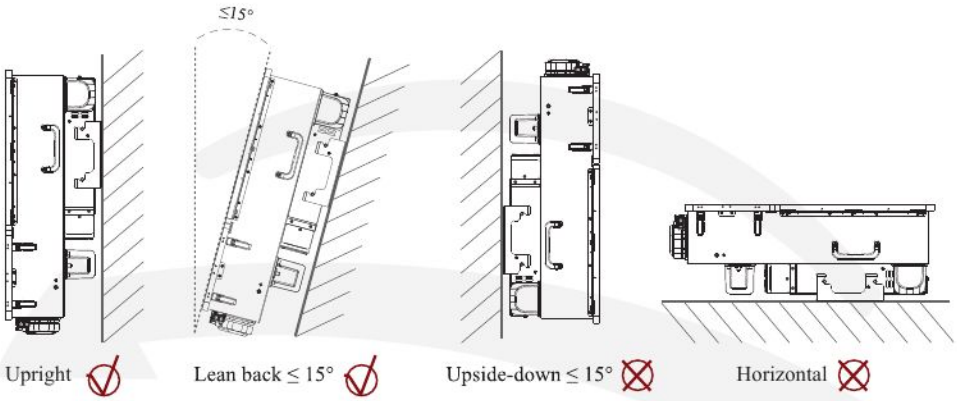

3.2.3 Clearance Requirements

To guarantee optimal operation and adequate heat dissipation for the machine, the following requirements for clearances should be observed.

Clearance requirement for single installation:

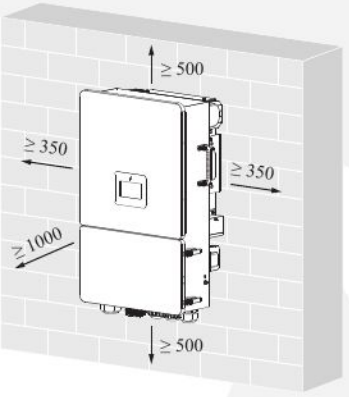

Unit: mm

Clearance requirement for multiple installation:

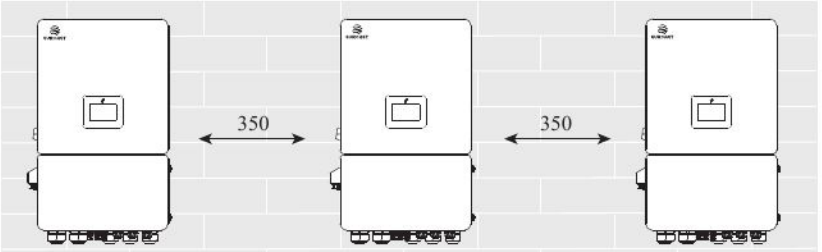

Unit: mm

3.3 Mounting the Inverter

Before mounting the inverter, you have to prepare expansion screws and a security screw.

DANGER	• The installation walls must be fireproof and non-flammable materials, otherwise there is a fire risk. • Before drilling holes, check whether there are electric power pipes or other pipes buried in the walls to avoid risks.
CAUTION	To prevent potential damages and injuries from inverter falling down, please hang the inverter on the bracket, do not loosen grip unless confirm that the inverter is well-mounted.

Mounting Bracket Location and Dimensions:

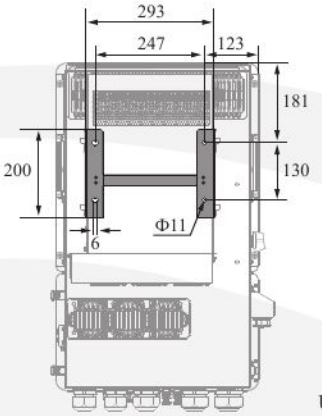

Unit: mm

Mounting Procedures:

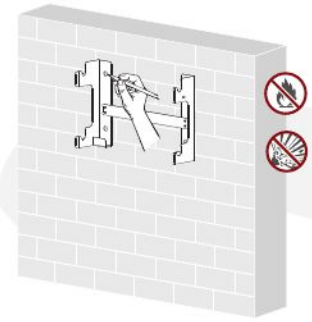

1 Set the mounting bracket horizontally and mark holes position on the wall.



2 Drill holes on the marked position.

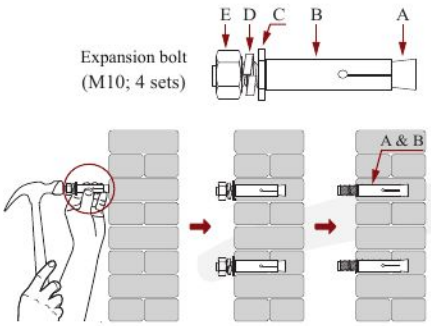

3 Hammer the expansion bolts into the wall.

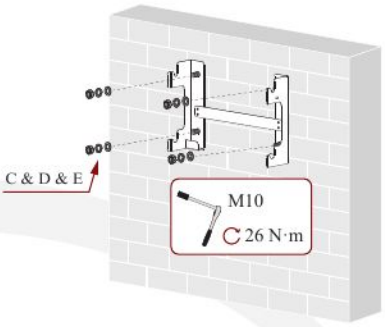

4 Tighten the expansion bolts.

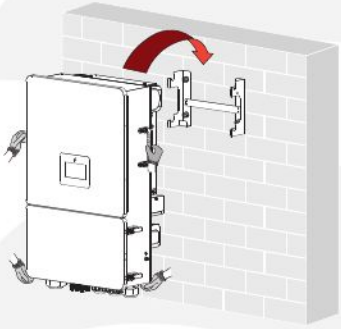

5 Mount the inverter onto the mounting bracket.

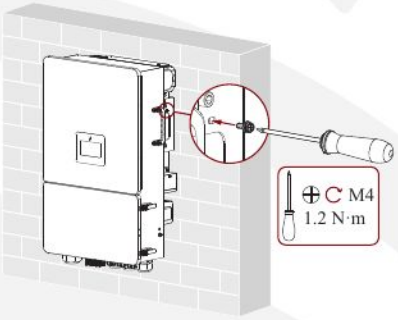

6 Lock the security screw.

4. Electrical Connection

This chapter shows the detailed electrical connection of ESS inverter.

4.1 Wiring Diagram

Non-parallel Connection Mode

DANGER	Ensure that inverter and all cables to be installed are completely powered off during whole installation and connection. Otherwise, high voltage may result in fatal injury.

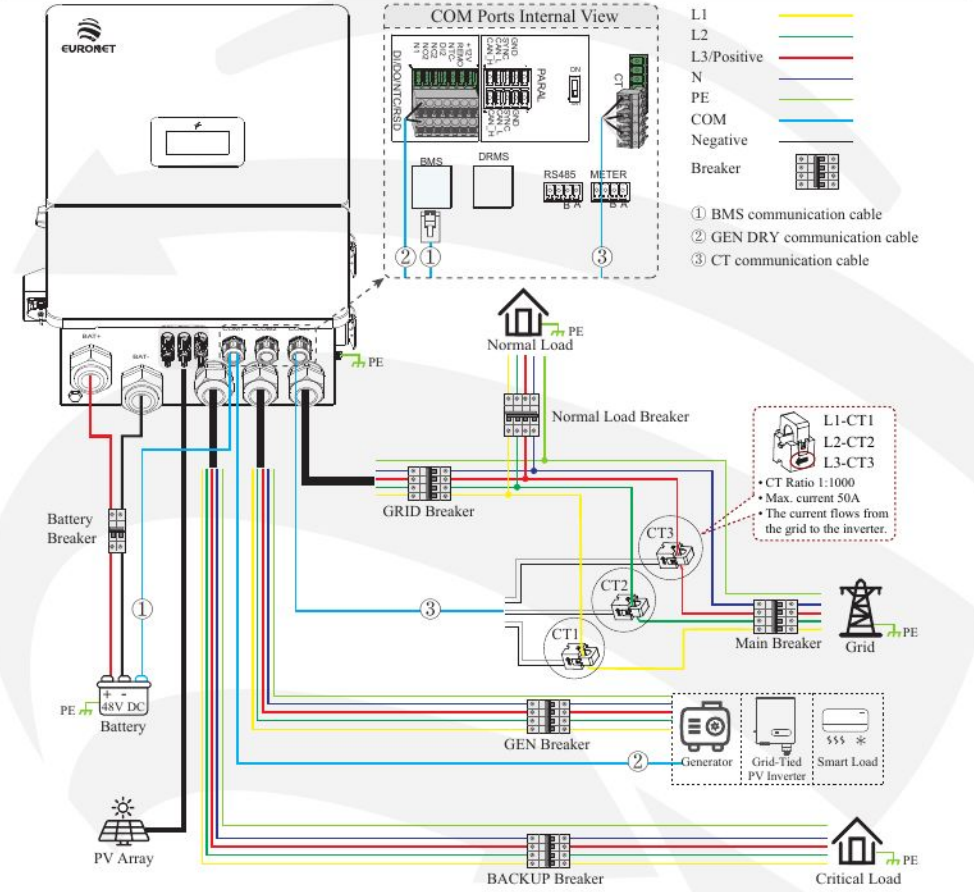

Note:

1. BMS communication connection is only for lithium battery.
2. The external DC/AC breakers are not supplied with the inverter and must be purchased separately. The specifications of main breaker and normal load breaker depend on household loads. For other breakers, please refer to the table below.

Breaker Recommendation Table

Inverter	Battery breaker	BACKUP breaker/GEN breaker/GRID breaker
6K/8K/10K/12K/15K/20K	≥ 400 A	≥ 50 A

Parallel Connection Mode (Inverter number: N=2)

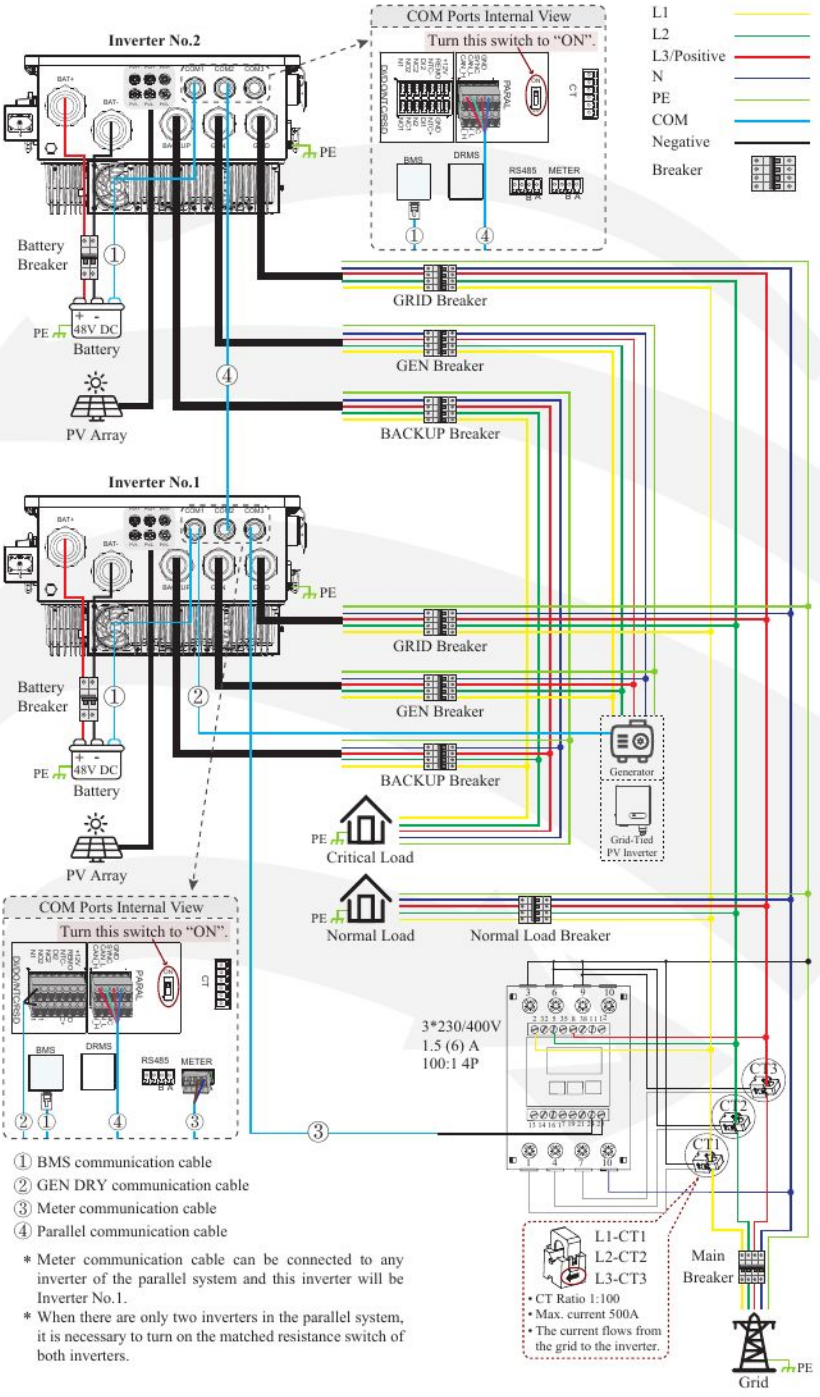

① BMS communication cable
② GEN DRY communication cable
③ Meter communication cable
④ Parallel communication cable

* Meter communication cable can be connected to any inverter of the parallel system and this inverter will be Inverter No.1.
* When there are only two inverters in the parallel system, it is necessary to turn on the matched resistance switch of both inverters.

Parallel Connection Mode (Inverter number: N=3)

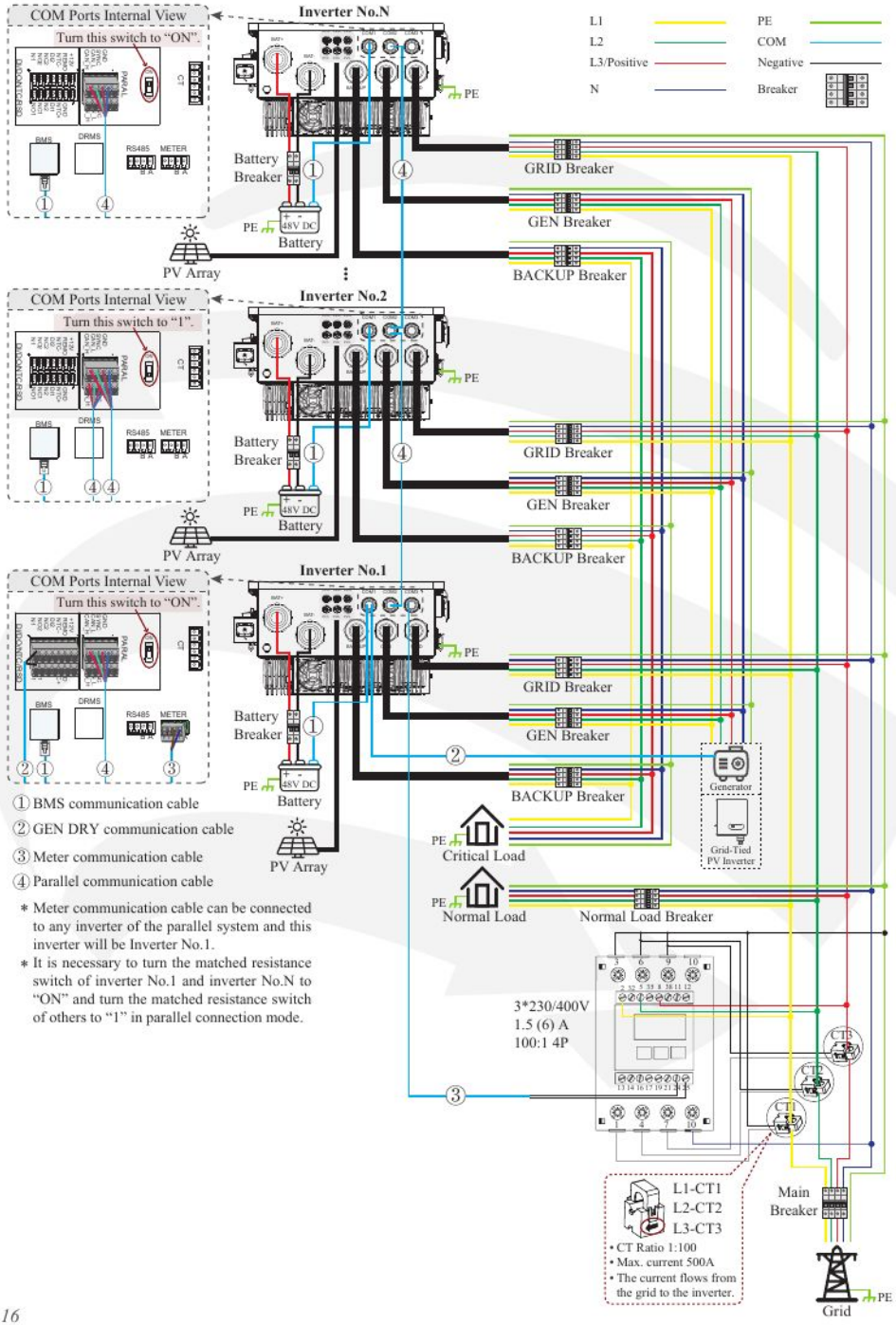

① BMS communication cable
② GEN DRY communication cable
③ Meter communication cable
④ Parallel communication cable

* Meter communication cable can be connected to any inverter of the parallel system and this inverter will be Inverter No.1.
* It is necessary to turn the matched resistance switch of inverter No.1 and inverter No.N to "ON" and turn the matched resistance switch of others to "1" in parallel connection mode.

Note:

1. BMS communication connection is only for lithium battery.
2. It is necessary to additionally purchase suitable meter and CT for parallel connection mode.
3. In one parallel system, batteries can be connected independently or in parallel, this manual only shows the batteries connected independently. In one system connected with parallel batteries, the inverter connected with the meter communication cable and BMS communication cable is the main inverter, i.e., Inverter No. 1.
4. With parallel connection mode, please go to ***Settings > Advanced > Inverter*** page to enable **Parallel Mode** and select the **Battery Connection Type** on the LCD of any of the inverters.
5. The external DC/AC breakers are not supplied with the inverter and must be purchased separately. The specifications of main breaker and normal load breaker depend on household loads. For other breakers, please refer to the table below.

Breaker Recommendation Table

Inverter	Battery breaker	BACKUP breaker/GEN breaker/GRID breaker
6K/8K/10K/12K/15K/20K	≥ 400 A	≥ 50 A

6. The BACKUP output port of the inverter has UPS functionality. When the grid is disconnected, the system automatically switches to off-grid mode. Under this mode, the inverter must work with the battery and the critical loads connected to the BACKUP port can work continuously without power failure.

NOTICE	• Under off-grid mode, please complete the output voltage and frequency settings. • It is better to choose the battery with sufficient capacity to ensure BACKUP function works normally. • If BACKUP output loads are inductive or capacitive loads, to make sure the stability and reliability of system, it is recommended to configure the power of these loads to be within 50% BACKUP output power range.

4.2 External Grounding Protection Connection

A protective earth (PE) terminal is equipped at the side of the inverter. Please ensure that this PE terminal is connected to the grounding rod for reliable grounding.

DANGER	Ensure that inverter and all cables to be installed are completely powered off during whole installation and connection. Otherwise, high voltage may result in fatal injury.
CAUTION	• Connecting the external protection to ground does not imply that the PE connection on the AC section is not obligatory. Both of them must be correctly connected and grounded. • If the positive pole or negative pole of the PV array is required to be grounded, then the inverter output (to AC grid) must be isolated by transformers in accordance with IEC62109-1, -2 standards.

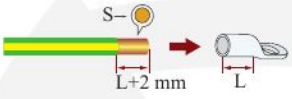

Items	Description
Green-yellow wire	S: 8 mm² to 10 mm² S(Green-yellow wire) ≥ S(PE wire of AC cable) S is the cross-sectional area.
OT terminal	OT10-6.4

1 Make the wire.

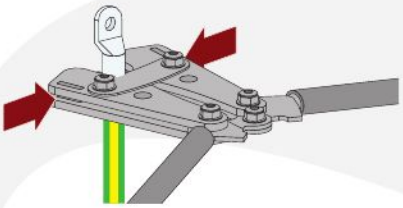

2 Crimp the OT terminal.

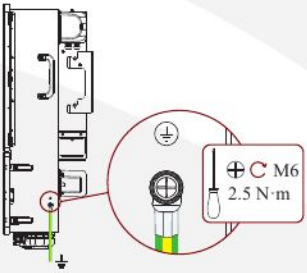

3 Connect the wire.

4.3 Cover Removing

DANGER	Before removing the cover, please ensure that the inverter and all cables to be installed have been completely powered off during the whole process of installation and connection.

Removing the Cover

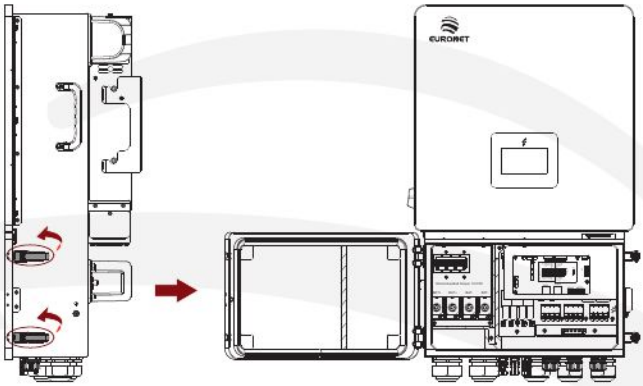

Wiring Box Overview

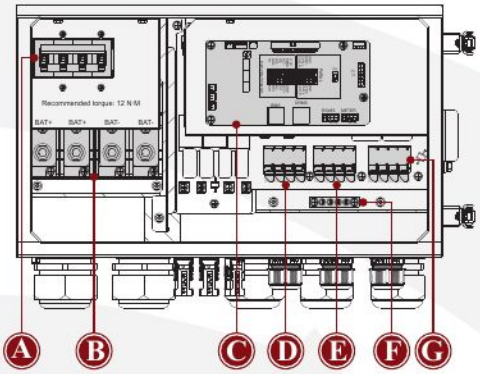

Number	Description	Number	Description
A	Battery breaker (Optional)	E	GEN connection terminals
B	Battery connection terminals	F	Grounding busbar
C	Communication interfaces	G	GRID connection terminals
D	BACKUP connection terminals		

4.4 Battery Connection

DANGER	Before connecting the battery terminals, ensure that both the AC terminal and the DC terminal are powered off and the PV switch is OFF. Otherwise there is a risk of high voltage shock.
WARNING	• Reverse polarity will damage the inverter! • Be careful of electric shock and chemical hazards! • The inverter now only supports lithium and lead-acid battery. • To reduce risk of injury, please use suitable cable size. • Install a DC breaker between the inverter and battery. • When connecting two battery banks to the inverter, the model and brand of the two battery banks should be the same. Additionally, the SOC and voltage of the two battery banks should be as consistent as possible.

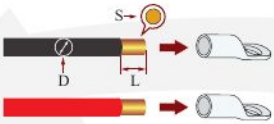

D	S	L	OT terminal
15 mm	70 mm^2	20 ± 0.5 mm	SC70-8

1 Make the wires.

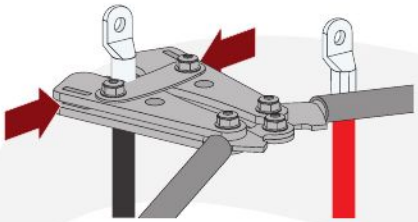

2 Crimp the OT terminals.



3 Use the heat shrinkable tubing to protect the wires.

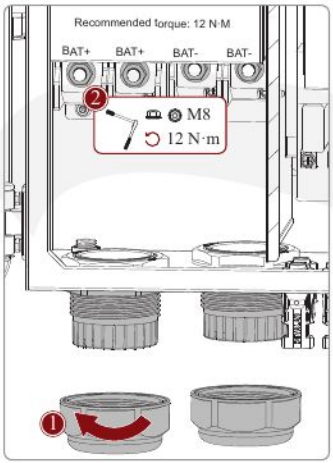

4 Loosen the rubber nuts and unscrew the M8 nuts on the battery connection terminals.

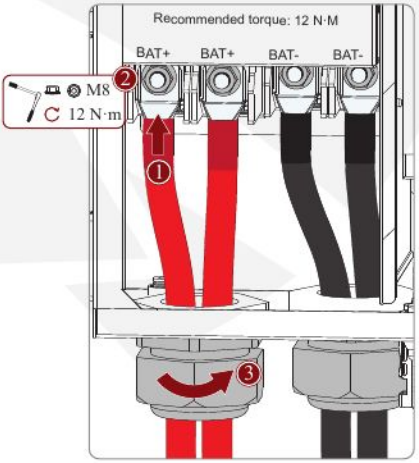

5 Thread the wires into the wiring box through the BAT ports, then tighten them on the battery connection terminals and fasten the rubber nuts.

4.5 PV Connection

WARNING	• Please check polarity of PV connectors! • If polarity reversed, do not try to disconnect any PV connector until the irradiance declines and the DC currents fall below 0.5 A! Only then disconnect the PV plugs and correct the polarity before reconnecting.
NOTICE	• Before connecting the PV panel, make sure the polarity is correct. Reverse polarity may permanently damage the inverter. • DO NOT connect PV to the grounding conductor. • The minimum insulation resistance to ground of the PV panels must exceed 33.3 kΩ, there is a risk of shock hazard if the requirement of minimum resistance is not met.

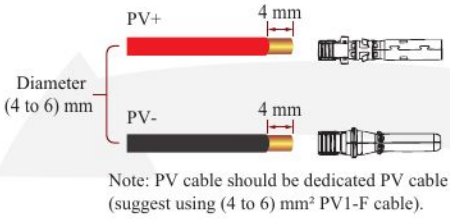

Note: PV cable should be dedicated PV cable (suggest using (4 to 6) mm² PV1-F cable).

1 Make the cables.

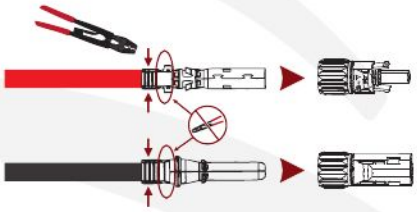

2 Assemble the cables.

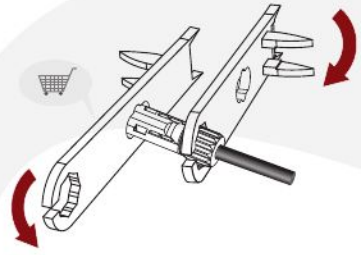

3 Tighten the waterproof nuts on each connector to avoid loosening.

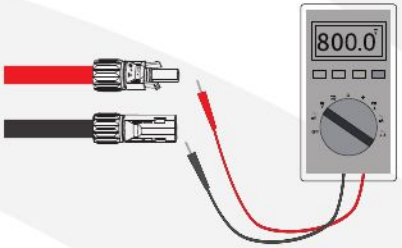

4 Test string voltage and confirm string polarity.

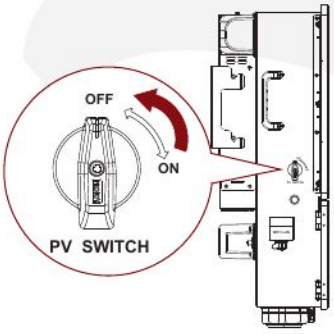

5 Ensure that the PV switch is OFF.

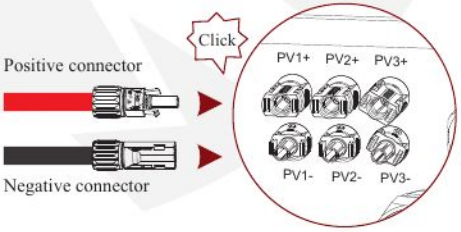

6 Insert the positive and negative connectors into the PV+/PV- ports until a "click" sound is heard.

4.6 GRID/GEN/BACKUP Connection

DANGER	Before connecting the GRID/GEN/BACKUP terminals, ensure that both the AC terminal and the DC terminal are powered off and the PV switch is OFF. Otherwise there is a risk of high voltage shock.

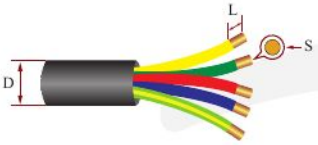

Model	D	S	L
GRID	(13.5 to 16.8) mm	(8 to 10) mm²	18 mm
GEN			
BACKUP			

1 Strip the wires insulation.

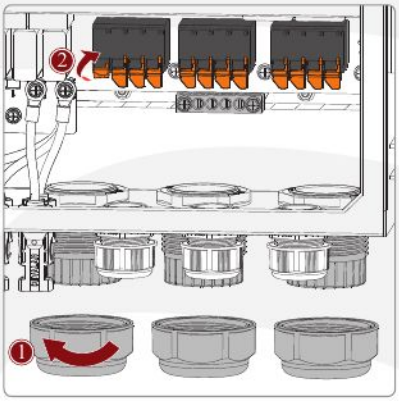

2 Loosen the rubber nuts and flip up the levers of terminal blocks.

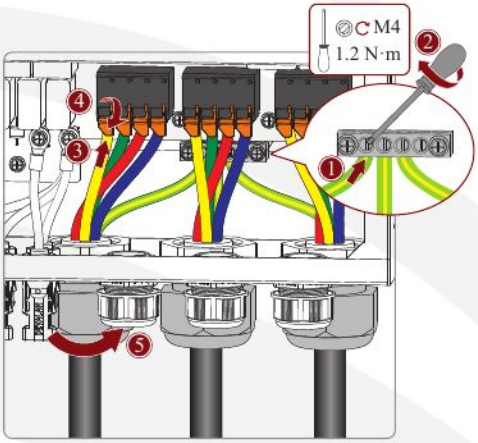

3 Thread the wires into the grounding busbar and the terminal blocks through the GRID/GEN/BACKUP connection ports. Then, fasten the screws, release the levers and finally fasten the rubber nuts.

4.7 Communication Connection

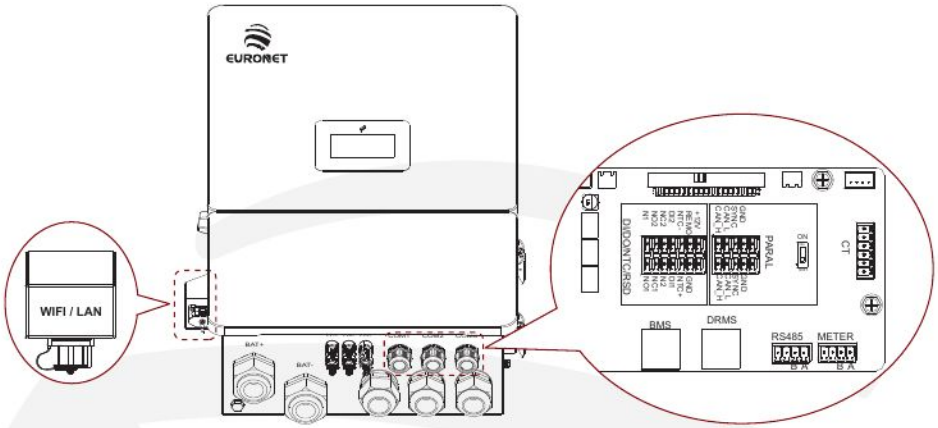

Interface		Description
14 Pin	DI	Dry contact input 1/2 control (reserved).
	DO	Dry contact output 1/2 control (reserved).
	NTC	Temperature sensor terminal of lead-acid battery.
	RSD	Rapid shutdown device control.
10 Pin	PARAL	A matched resistance switch for parallel communication.
6 Pin	CT	For CT communication or grid current sense.
RJ45	BMS	Lithium battery communication interface.
	DRMS	Demand response mode for Australia application.
4 Pin	RS485	RS485 communication (Monitoring).
	METER	For meter communication or grid current sense.
USB	WIFI/LAN	For Wi-Fi/LAN communication.

4.7.1 DI/DO/NTC/RSD Connection

Pin Definition of 14-Pin Terminal

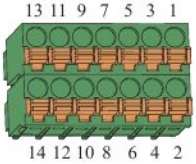

Pin	Function Description	Pin	Function Description
1	+12V	2	NC
3	RSD/EPO	4	GND_S (for NTC)
5	GND_S (for RSD/EPO/+12V/ Dry Contact)	6	TH_NTC
7	DI_2 (Reserve for Data Input 2)	8	DI_1 (Reserve for Data Input 1)
9	NC2 (Normal Close)	10	N2 (Common Pole)
11	NO2 (Normal Open)	12	NC1 (Normal Close)
13	N1 (Generator Control)	14	NO1 (Generator Control, Normal Open)

Cable Connection Procedure



1 Strip the insulation.

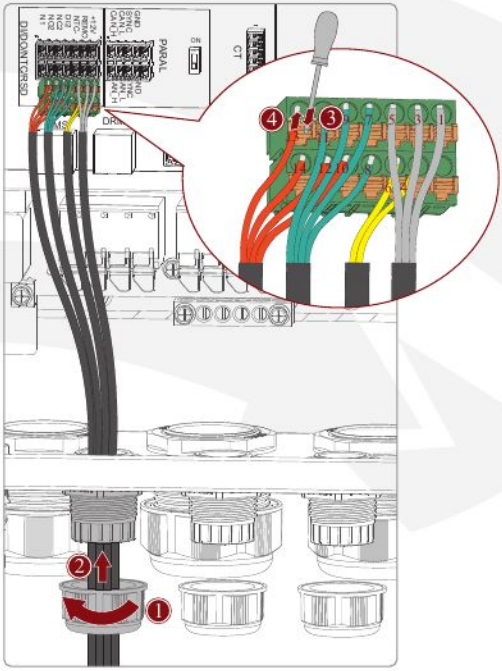

2 Loosen the rubber nut, then thread the communication cables into the wiring box through the COM port and assemble the wires according to the pin definition.

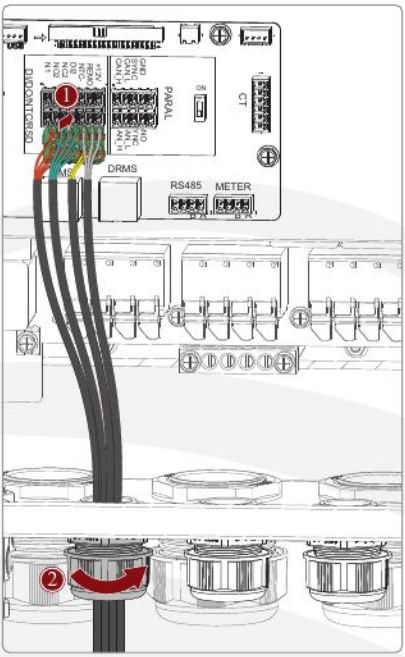

3 Insert the terminal to the DI/DO/NTC/RSD interface and fasten the rubber nut.

4.7.2 Parallel Communication Connection

Pin Definition of 10-Pin Terminal

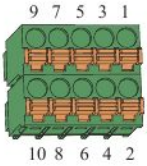

Pin	Function Description	Pin	Function Description
1	NC	2	NC
3	GND_S	4	GND_S
5	PARA_SYNC	6	PARA_SYNC
7	CAN_L	8	CAN_L
9	CAN_H	10	CAN_H

Cable Connection Procedure



1 Strip the insulation.

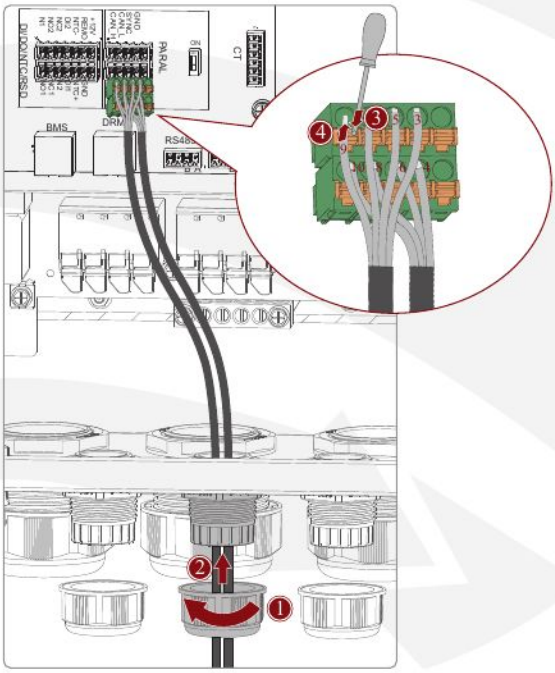

2 Loosen the rubber nut, then thread the communication cables into the wiring box through the COM port and assemble the wires according to the pin definition.

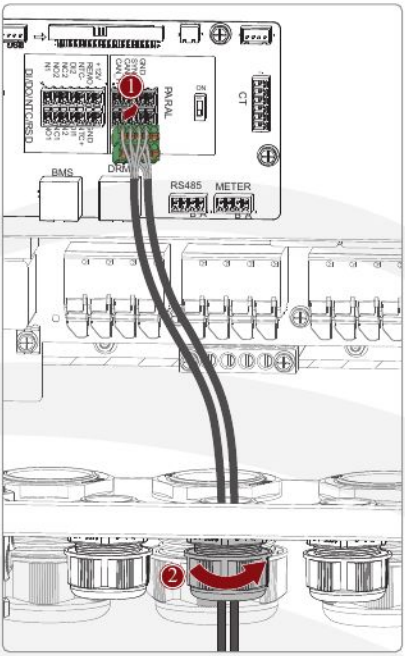

3 Insert the terminal to the PARAL interface and fasten the rubber nut.

Parallel Communication Connection Overview

It is necessary to turn the matched resistance switch of inverter No.1 and inverter No.N to “ON” and turn the matched resistance switch of others to “1” in parallel connection mode.

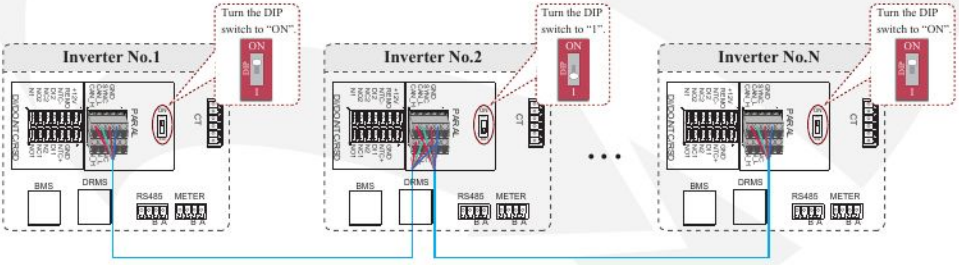

4.7.3 CT Connection

You can monitor electricity usage of all loads with CT (current transformer).

Before connecting to the Grid, please install a separate AC breaker (≥ 50 A; prepared by user) between the CT and the Grid to ensure that the inverter can be safely disconnected during maintenance.

When performing CT connection, pay attention to the current flow direction and lead the live line through the detection hole of CT.

The connection diagram of power cable of CT is shown as below:

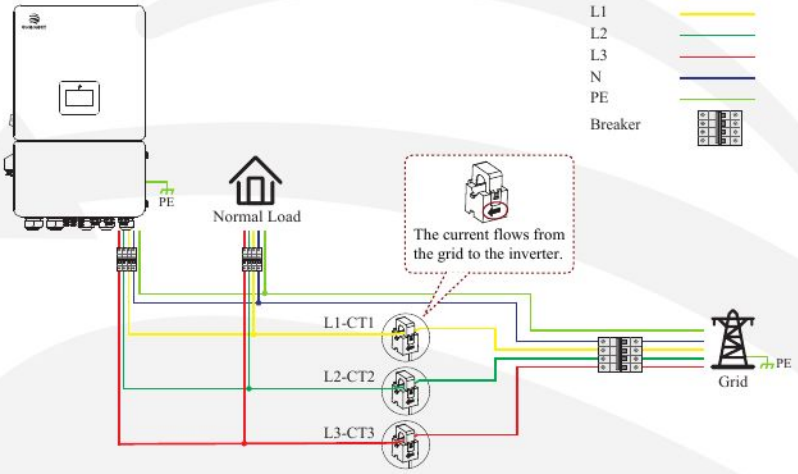

NOTE	• The arrow on the CT indicates the current flow from grid to inverter. The current direction from grid to inverter is defined as positive and current direction from inverter to grid is defined as negative. • L1, L2, and L3 can only pass through the detection hole of CT1, CT2, and CT3 respectively.

Pin Definition of 6-Pin Terminal

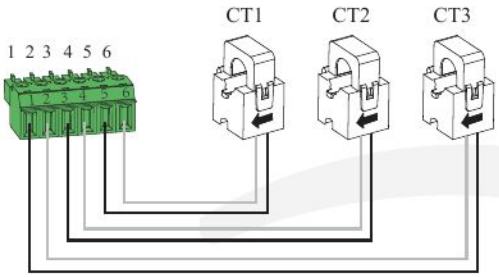

Pin	Function Description	Phase Line
1	GND	L3
2	CT3+	
3	GND	L2
4	CT2+	
5	GND	L1
6	CT1+	

Cable Connection Procedure

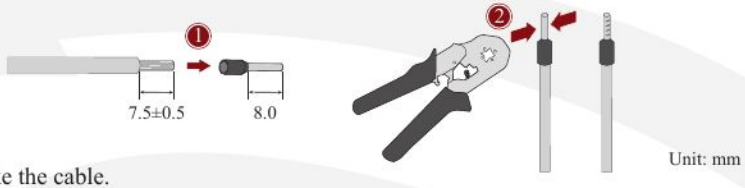

Unit: mm

1 Make the cable.

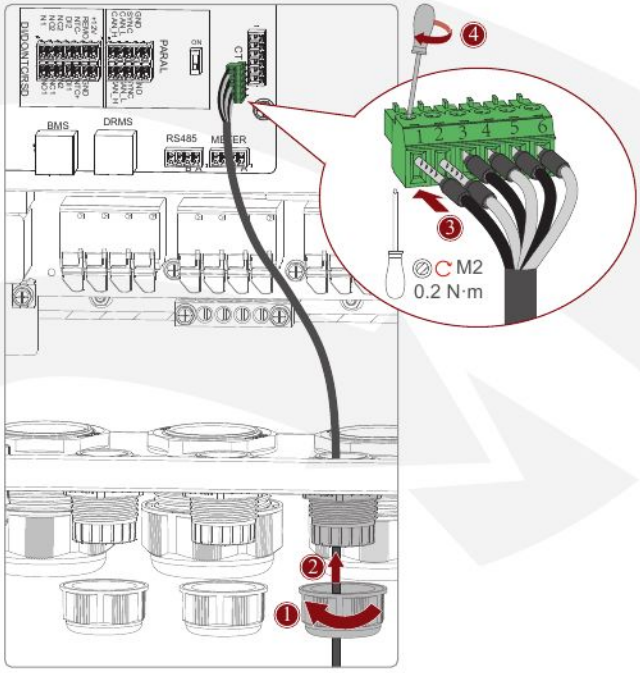

2 Loosen the rubber nut, then thread the communication cable into the wiring box through the COM port and assemble the wires according to the pin definition.

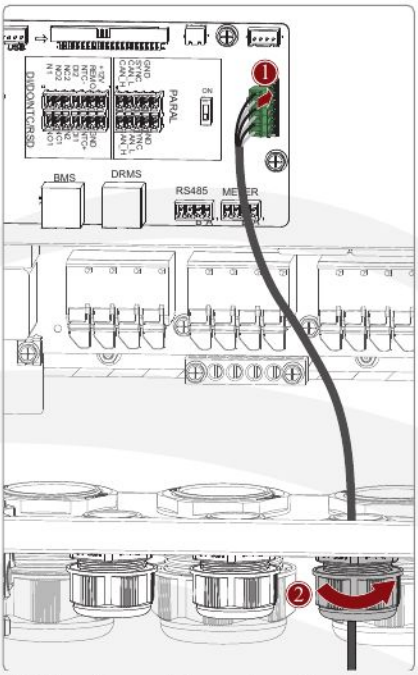

3 Insert the terminal to the CT interface and fasten the rubber nut.

4.7.4 BMS Connection

NOTE	• BMS communication connection is only for lithium battery. • This manual ONLY illustrates the pinout sequence of BMS at INVERTER SIDE. For details about the pinout sequence at battery side, see the user manual of the battery you use, and the following pinout diagram of battery side is only for illustration.

Standard RJ45 Pinout

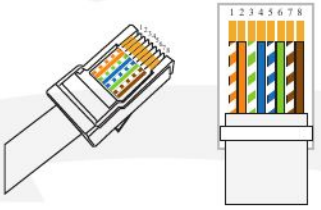

Pin	Function Description
1	White-Orange
2	Orange
3	White-Green
4	Blue
5	White-Blue
6	Green
7	White-Brown
8	Brown

Pin Definition of RJ45 Interface

Always face the flat side of the terminal, and count the pin slots from left to right, which correspond to 1 to 8. Read the pin definitions of both the battery and inverter carefully.

Inverter			Battery Example	
RJ45 Port	Pin	Function Description	Pin	Function Description
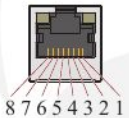	1	RS485_A	1	NC
	2	RS485_B	2	NC
	3	GND_S	3	GND_S
	4	CAN_H	4	CAN_H
	5	CAN_L	5	CAN_L
	6	NC	6	GND_S
	7	NC	7	NC
	8	NC	8	NC

CAN BUS Connection Principle

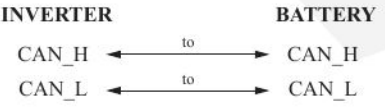

Cable Connection Procedure

Method 1: Use the INVERTER RJ45 pinout as the standard pinout to crimp wires, then the battery side will be a non-standard one (special pinout). Cut off the other no-used wires (1/2/3/6/7/8) for the battery RJ45 terminal.



Method 2: Use the BATTERY RJ45 pinout as the standard pinout to crimp wires, then the inverter side will be a non-standard one (special pinout). Cut off the other no-used wires (1/2/3/6/7/8) for the inverter RJ45 terminal.



a. Prepare RJ45 terminals and strip appropriate length of COM cables.
b. According to pin definitions and cable order, assemble the RJ45 terminals and crimp communication wires. There are two methods to assemble the RJ45 terminals.
c. Then label the RJ45 terminals (BAT or INV) to avoid confusion.
d. After finishing wire-making, use a multimeter or other specific tool to determine if your cable is good, bad, or wired incorrectly.

1

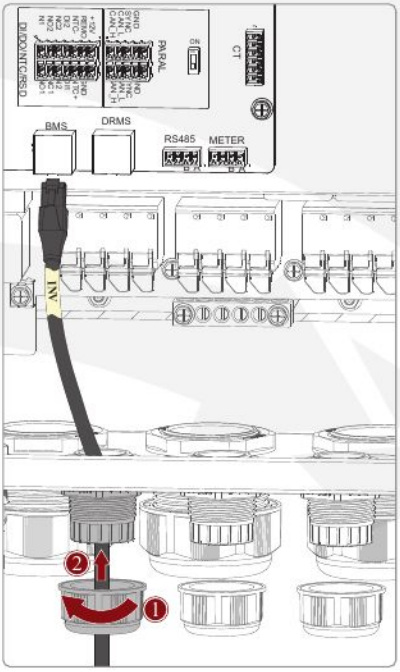

2 Loosen the rubber nut and thread the communication cable into the wiring box through the COM port.

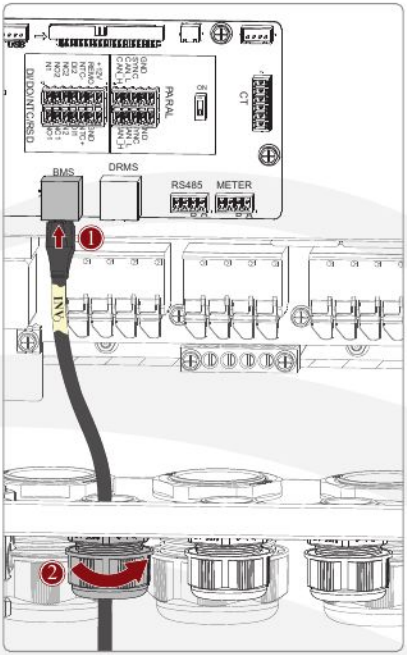

3 Insert the terminal to the BMS interface and fasten the rubber nut.

4.7.5 DRMS Connection

DRMs is a shortened form for "inverter demand response modes". It is a compulsory requirements for inverters in Australia.

Pin Definition of RJ45 Terminal

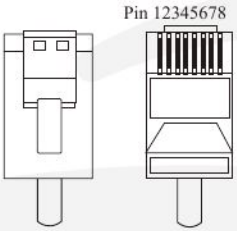

Pin	Function Description
1	DRM 1/5
2	DRM 2/6
3	DRM 3/7
4	DRM 4/8
5	REF
6	DRM 0/COM
7	NC
8	NC

Cable Connection Procedure

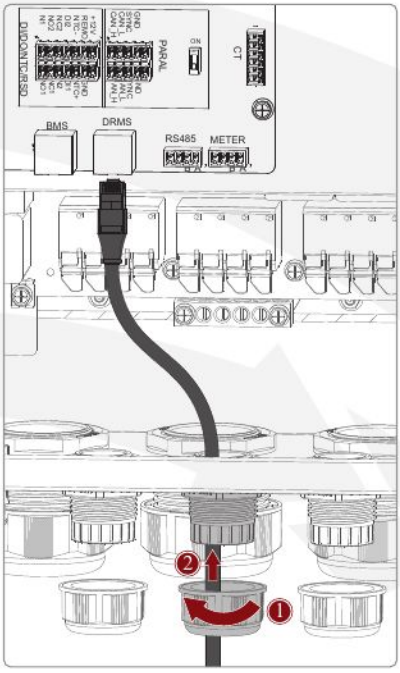

1 Loosen the rubber nut and thread the communication cable into the wiring box through the COM port.

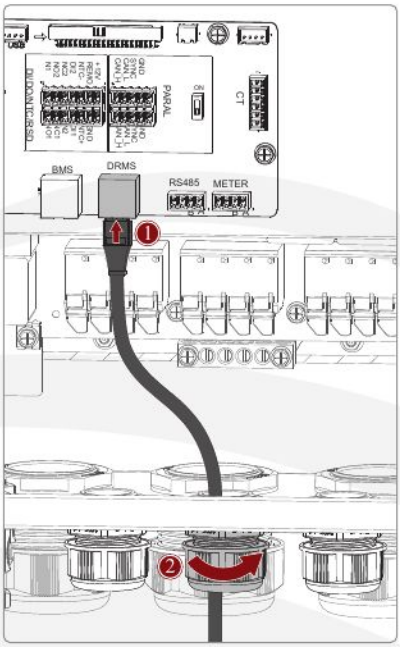

2 Insert the terminal to the DRMS interface and fasten the rubber nut.

4.7.6 RS485 Connection

Pin Definition of 4-Pin Terminal



Pin	Function Description
1	RS485_A
2	RS485_B
3	/
4	/

Cable Connection Procedure

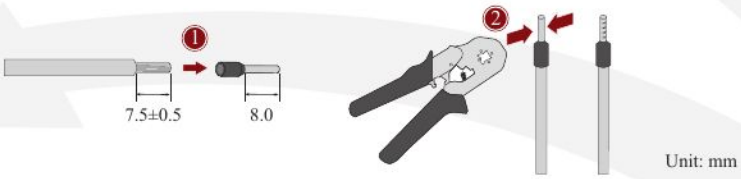

1 Make the cable.

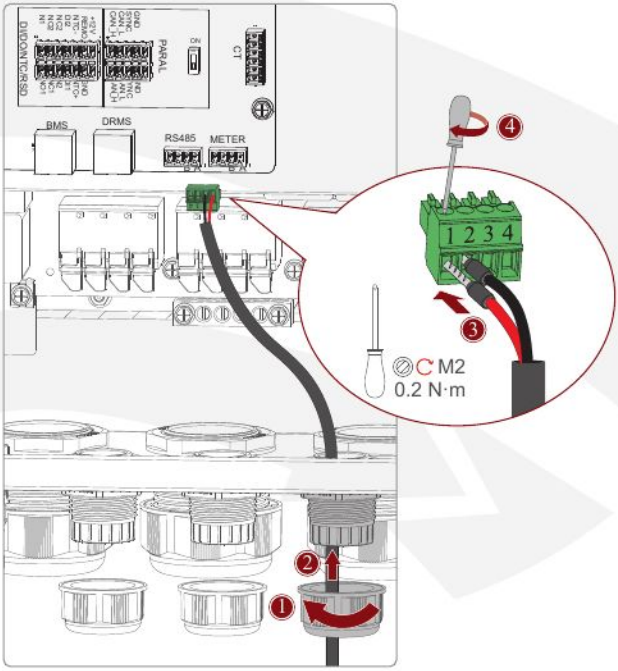

2 Loosen the rubber nut and thread the communication cable into the wiring box through the COM port.

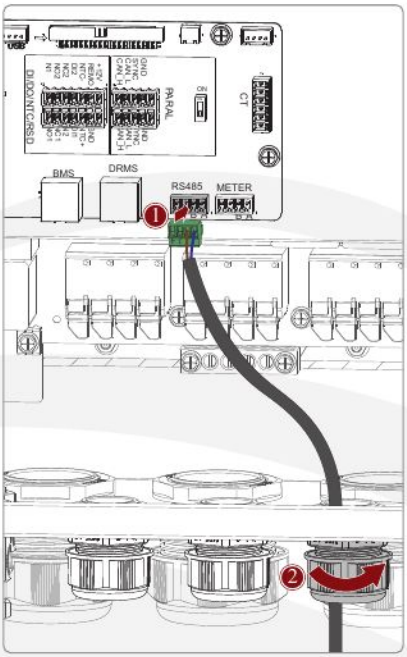

3 Insert the terminal to the RS485 interface and fasten the rubber nut.

4.7.7 Meter Connection

Pin Definition of 4-Pin Terminal and Meter

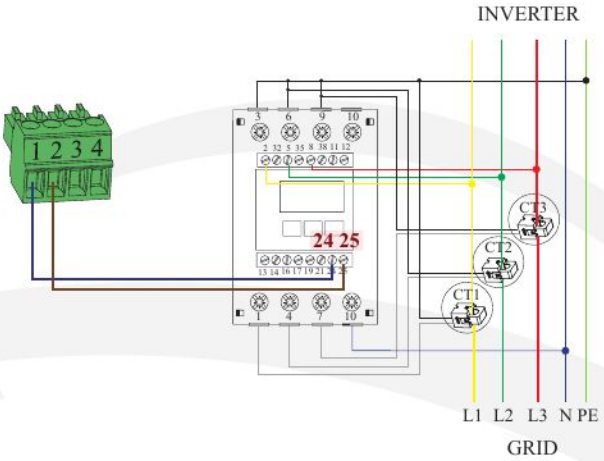

Pin (Terminal)	Pin (Meter)	Function Description
1	24	RS485_A
2	25	RS485_B
3	/	/
4	/	/

Cable Connection Procedure

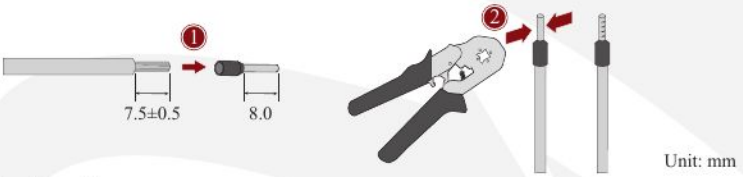

1 Make the cable.

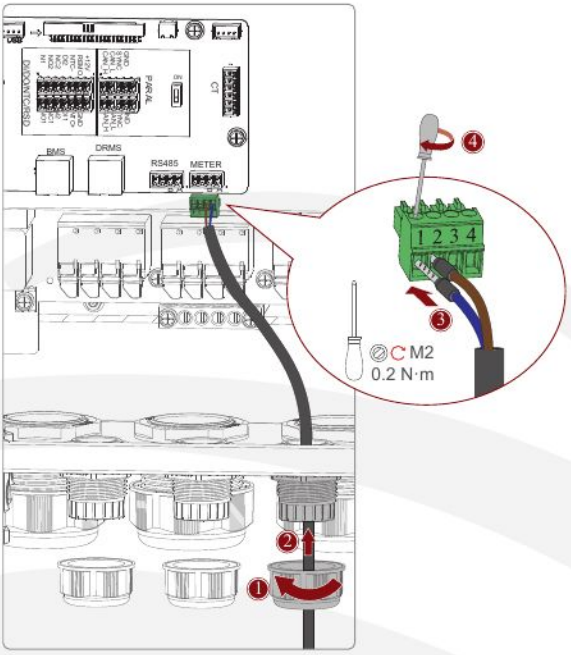

2 Loosen the rubber nut and thread the communication cable into the wiring box through the COM port.

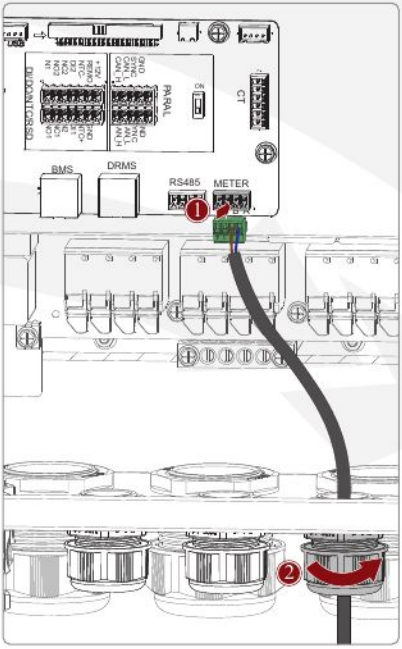

3 Insert the terminal to the METER interface and fasten the rubber nut.

4.7.8 Wi-Fi/LAN Module Connection

For details, please refer to the corresponding Module Installation Guide in the packing.

The appearance of modules may be slightly different. The figure shown here is only for illustration.

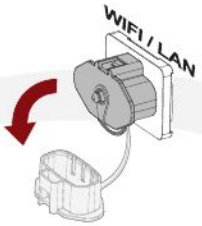

1 Move the cover.

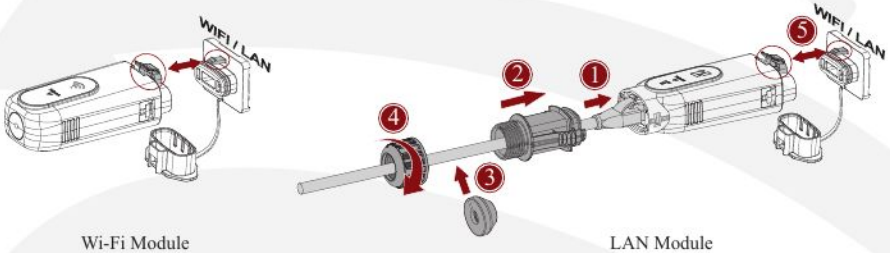

Wi-Fi Module LAN Module

2 Insert the Wi-Fi/LAN module into the WIFI/LAN port and ensure that it does not fall off.

4.8 Cover Installation

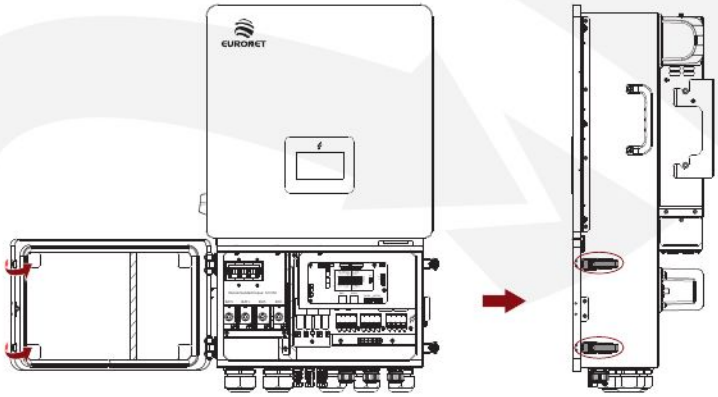

5. System Operation

5.1 Inverter Working Mode

The inverter supports several different working modes.

5.1.1 Self-Consumption Mode

Go to ***Settings > Advanced > Inverter*** page and tap ***Work mode*** to select ***Self-consumption mode*** on the LCD.

Under self-consumption mode, the priority of PV energy consumption will be Load > Battery > Grid, which means the energy produced by PV system gives priority to powering local loads, the excess energy is used to charge the battery and the remaining energy is fed into the grid.

This is the default mode to increase self-consumption rate. There are several situations of self-consumption working mode based on PV energy.

a) Abundant PV Energy

When PV energy is sufficient, it will give priority to local loads, the excess energy charges the battery first, then the remaining power will be fed into the grid.

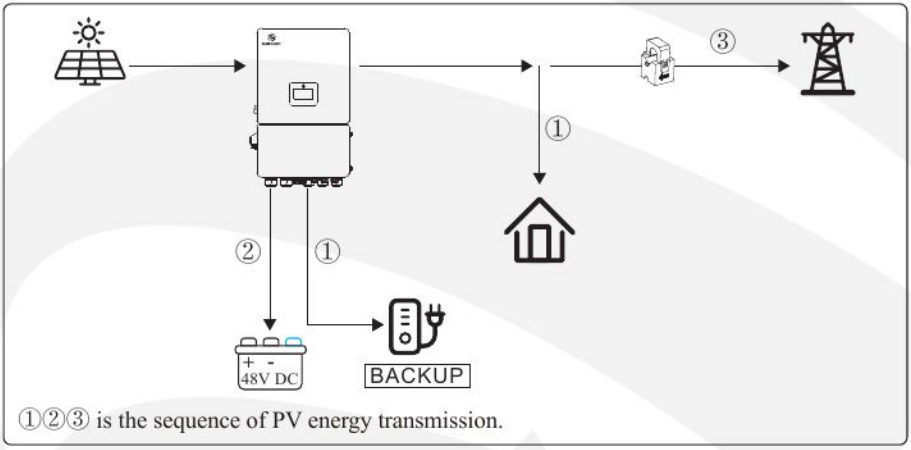

①②③ is the sequence of PV energy transmission.

b) Limited PV Energy

When the PV energy is not enough to cover all consumption, the PV energy will be entirely used by loads, and the insufficient part will be supplied by battery. Then still insufficient parts will be supplied by grid.

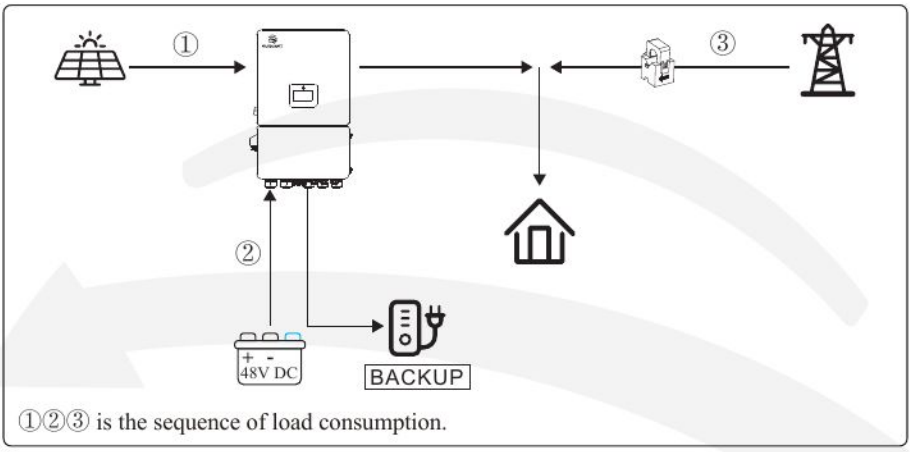

①②③ is the sequence of load consumption.

c) No PV Input

The inverter will first discharge the battery energy for home load consuming when there is no PV input (such as in the evening or some cloudy or rainy days). If the battery power is not enough, the load will be supplied by the grid.

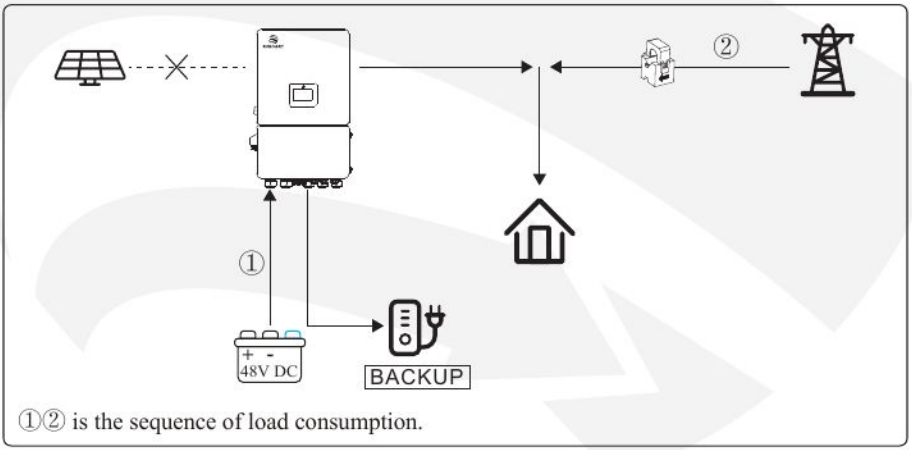

①② is the sequence of load consumption.

5.1.2 Feed-in Priority Mode

Go to ***Settings > Advanced > Inverter*** page and tap ***Work mode*** to select the ***Feed-in priority mode*** on the LCD.

Under this mode, the priority of PV energy consumption will be Load > Grid > Battery, which means the energy produced by PV gives priority to powering local loads, the excess energy is fed into the grid, and the remaining energy is used to charge the battery.

a) Abundant PV Energy

When PV energy is sufficient, it will give priority to local loads, the excess power will be fed into the grid first, then the remaining power charges the battery.

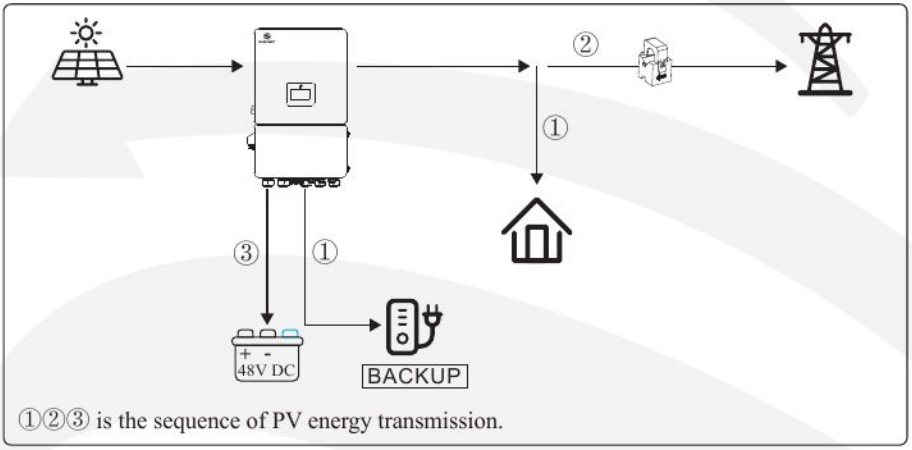

①②③ is the sequence of PV energy transmission.

b) Limited PV Energy

When PV energy is limited and cannot meet the feed-in grid power, the battery will discharge to meet it.

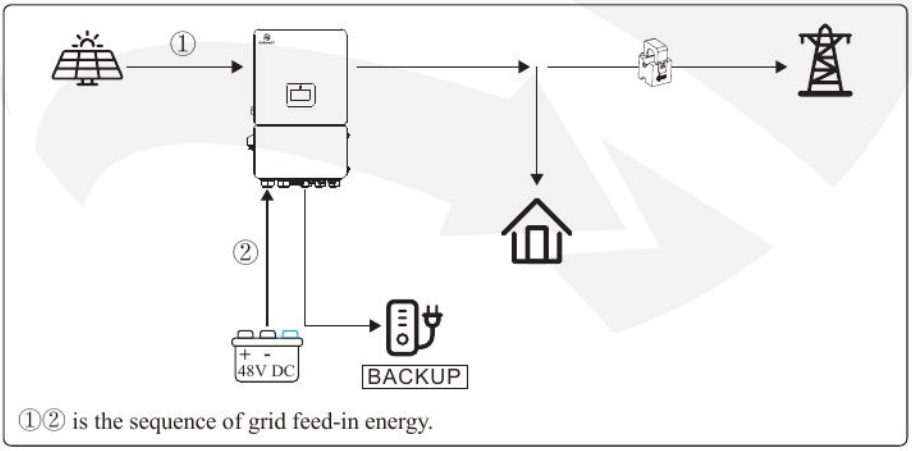

①② is the sequence of grid feed-in energy.

c) No PV Input

The inverter will first discharge the battery power for home load consuming when there is no PV input (such as in the evening or some cloudy or rainy days). If the battery power is not enough, the load will be supplied by the grid.

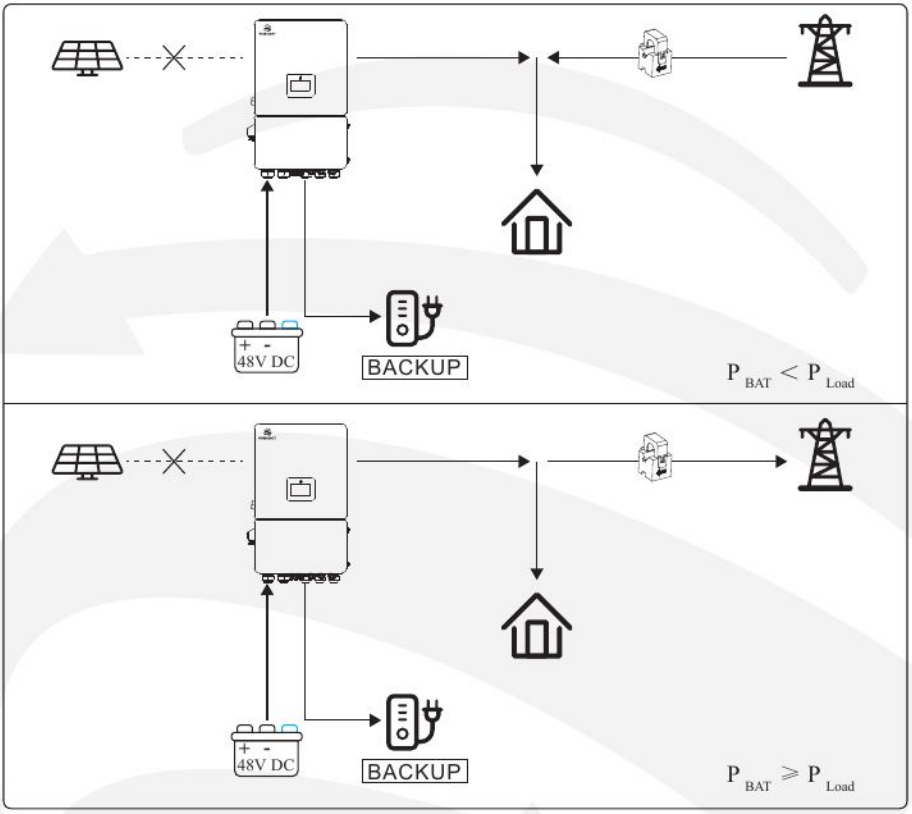

5.1.3 Back-up Mode

Go to ***Settings > Advanced > Inverter*** page and tap ***Work mode*** page to select the ***Back-up mode*** on LCD.

Under this mode, the priority of PV energy consumption will be Battery > Load > Grid.

This mode aims at fast battery charging. You can set whether to allow AC charging or not.

Forbid AC Charging Mode

In this mode, the battery can be charged only with PV energy, and the charging power varies with PV energy.

a) Abundant PV Energy

When PV energy is sufficient, PV charges the battery first, then meets the load, and the rest is fed into the grid.

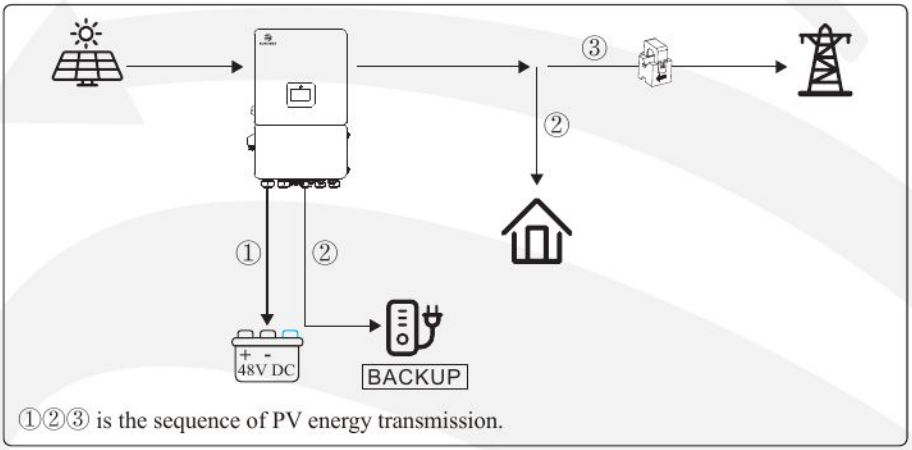

①②③ is the sequence of PV energy transmission.

b) Limited PV Energy

When PV energy is limited, PV charges the battery, and the grid meets the load demand, including normal load and backup load.

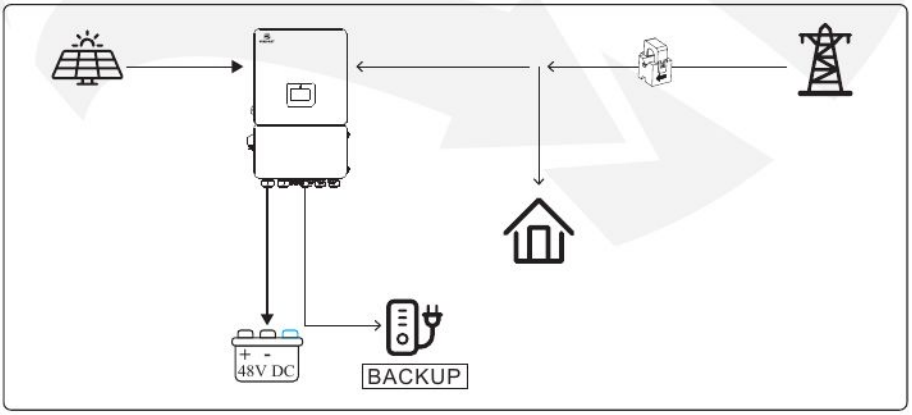

Allow AC charging

In this situation, the battery can be charged both with PV and AC.

a) Abundant PV Energy

When PV energy is sufficient, PV charges the battery first, then meets the loads, and the rest is fed into the grid.

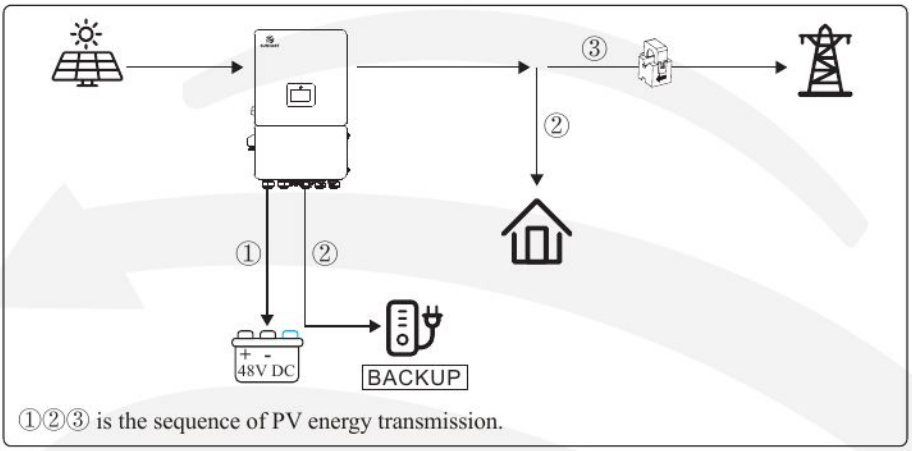

①②③ is the sequence of PV energy transmission.

b) Limited PV Energy

When the PV energy is not enough to charge the battery, the grid energy will charge the battery as supplement. Meanwhile, the grid energy is consumed by loads.

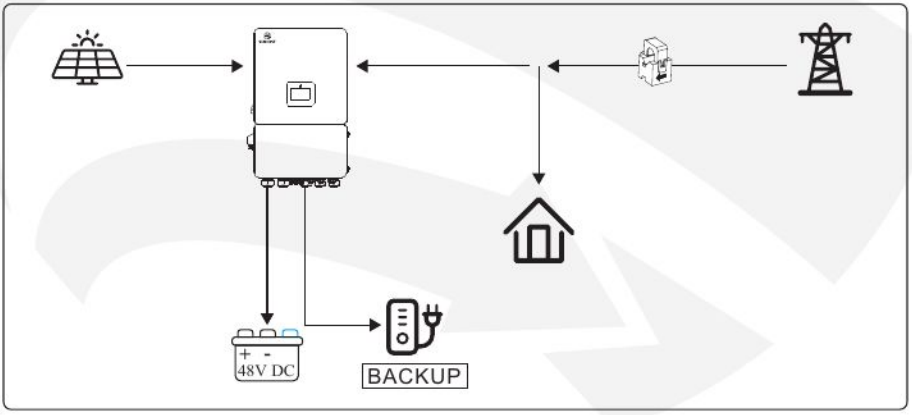

5.1.4 Forced Charge/Discharge Function

According to the demands of application, the user can set the inverter to work on forced charge/discharge the battery in any working mode.

Please go to ***Settings > Advanced > Inverter*** page to enable ***Time-based Control*** on the LCD. There are six time periods in which you can set this function. Outside of the set periods, the inverter returns to its original working mode. The forced charge/discharge function has the highest priority.

The relationship between the forced charge/discharge function and working mode shown as below:



M: Self-consumption mode/Feed-in priority mode/Back-up mode.

T1 - T6: Time period 1 for forced charge/discharge parameter setting.

T1 - T6 is priority to M.

5.1.5 Off-Grid Mode

When the power grid is cut off, the system automatically switches to off-grid mode.

Under off-grid mode, only critical loads are supplied to ensure that important loads continue to work without power failure.

Under this mode, the inverter cannot work without the battery.

a) Abundant PV Energy

When PV energy is sufficient, the PV energy will be first consumed by critical load, then will be used to charge the battery.

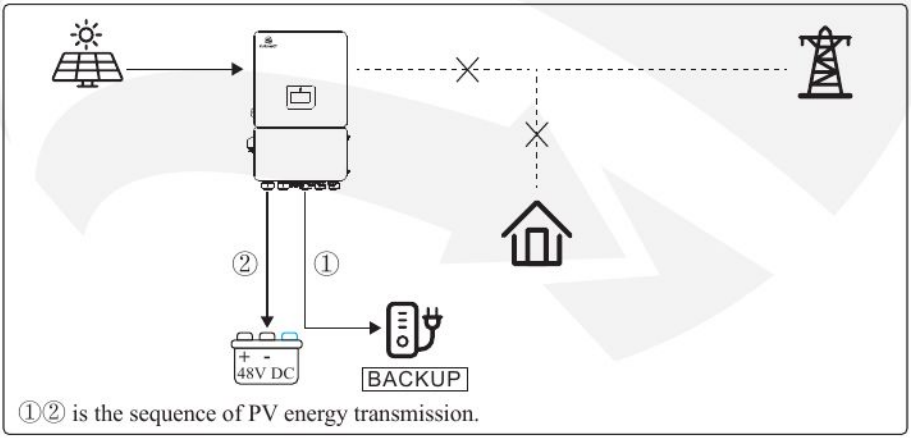

①② is the sequence of PV energy transmission.

b) Limited PV Energy

When PV energy is limited, BACKUP loads are first powered by PV and then supplemented by battery.

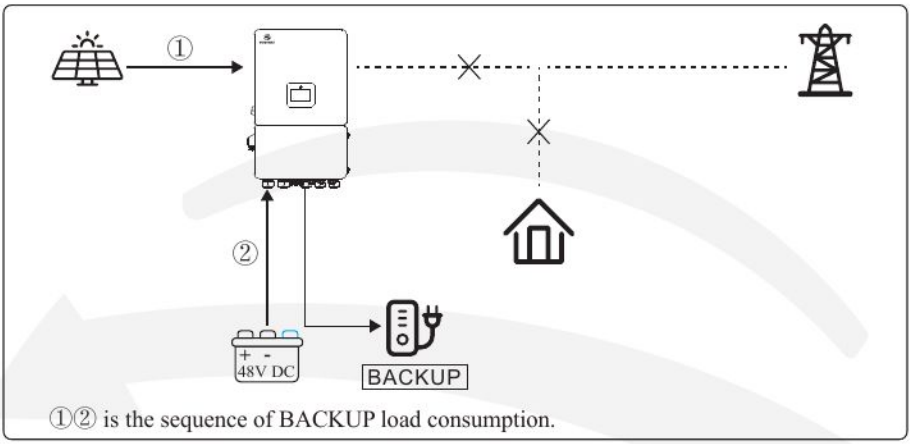

①② is the sequence of BACKUP load consumption.

NOTICE	• Under off grid mode, please complete the output voltage and frequency settings. • It is better to choose the battery with sufficient capacity to ensure BACKUP function works normally. • If BACKUP output loads are inductive or capacitive loads, to make sure the stability and reliability of system, it is recommended to configure the power of these loads to be within 50% BACKUP output power range.

5.1.6 On-Grid Unbalanced Output

1) The normal load is single phase.

2) The three phases of normal load are the same or unbalanced.

This is the best scheme to meet your needs.

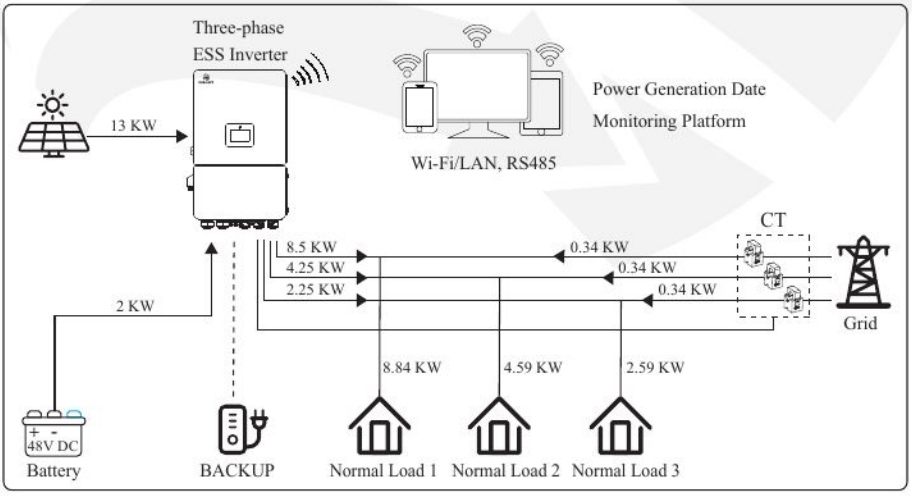

5.1.7 Back-up Unbalanced Output

1) The critical load is single phase.

2) The three phases of critical load are the same or unbalanced.

This is the best scheme to meet your needs.

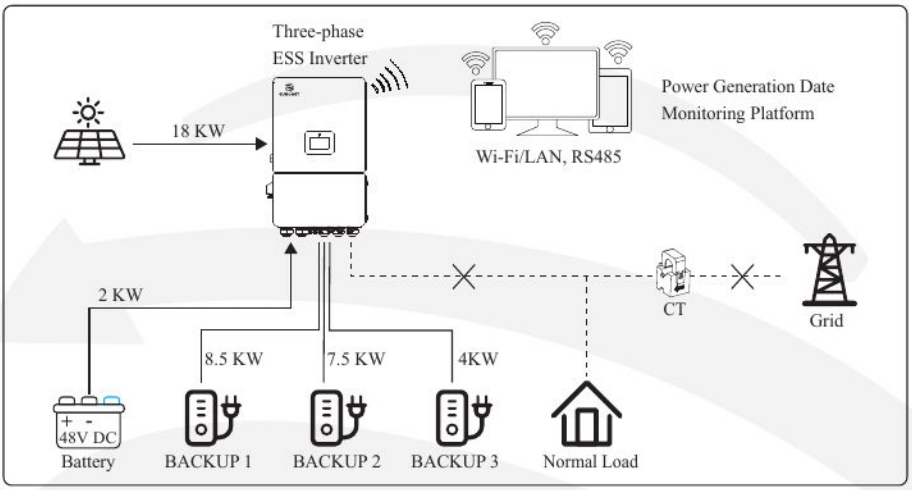

5.2 Startup/Shutdown Procedure

Before starting up, check whether the installation is secure and strong enough, and whether the system has been well grounded. Then make sure the connections of AC, battery, PV etc. are correct, and confirm the parameters and configurations conform to relevant requirements.

AC Frequency: 50/60 Hz	PV Voltage: 120 V to 1000 V
Battery Voltage: 40 V to 60 V	Grid AC Voltage: 180 V to 270 V (311 V to 467 V)

5.2.1 Startup Procedure

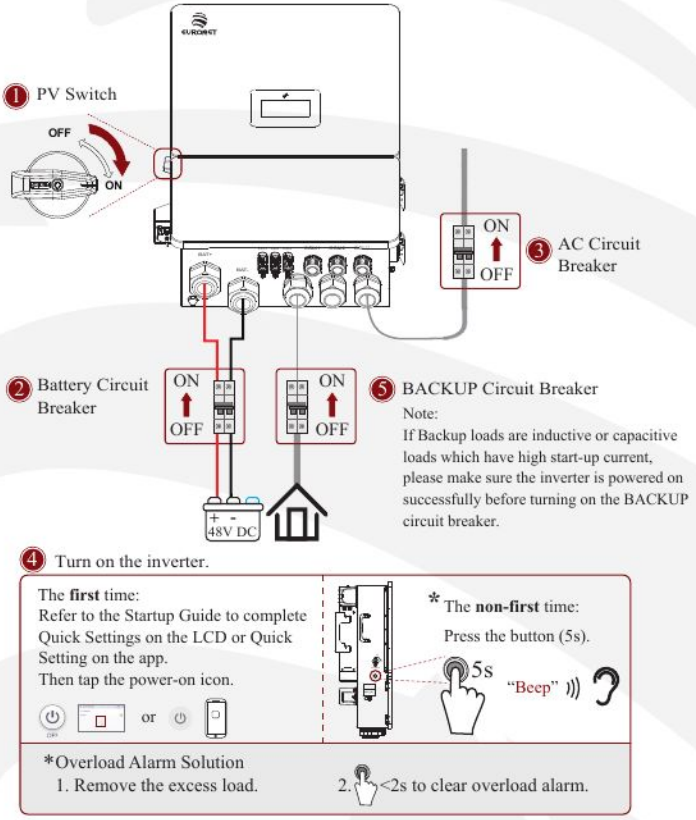

5.2.2 Shutdown Procedure

DANGER	After the inverter is powered off, the remaining electricity and heat may still cause electric shock and body burns. If you need to disconnect the inverter cables, please wait at least 10 minutes before touching these parts of inverter.

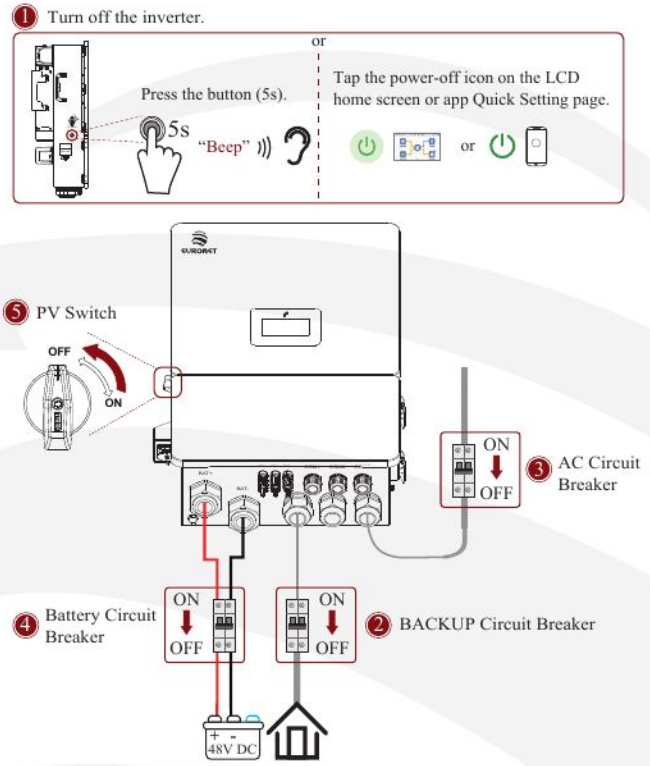

6. Commissioning

It is necessary to fully commission the inverter system for it is essential to protect the system from fire, electric shock, other damages, and personal injury.

6.1 Inspection

Before commissioning, the operator or installer (qualified personnel) must inspect the system carefully and ensure that:

1. The system is properly installed according to the contents and instructions in this manual, and there is sufficient space for operation, maintenance, and ventilation.
2. All terminals and cables are in good conditions.
3. No objects are left in/on the inverter or within the required clearance.
4. The PV and the battery pack are working normally, the grid is normal.

6.2 Commissioning Procedure

When all items have been checked and the system is ready for use, start the commissioning procedure.

1. Power on the system by following the Startup Procedure in section 5.2.1 Startup Procedure.
2. Set the parameters on the app/LCD according to user's needs.
3. Complete commissioning.

7. User Interface

7.1 LED

This chapter describes the indicator statuses when the inverter is in operation and explains the meanings of each status.

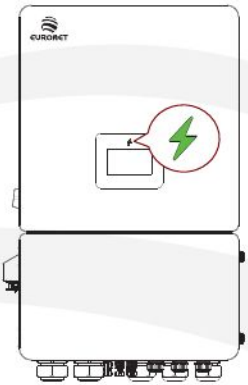

LED Indicator	Status	Description
Green led	On	On-Grid status
	Blink	Standby status
Blue led	On	Off-Grid status
Red led	On	Fault has occurred
→ →	Light alternately (1 color /0.25s)	Burning code

7.2 LCD

7.2.1 Main Menu

The LCD is a touchscreen, fugure below shows the overall information of the inverter.

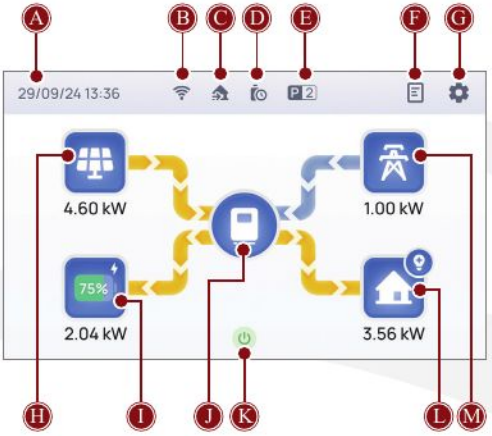

Number	Icon	Description
A	Time	The current system time
B	Wi-Fi	Wi-Fi connection status
C	Work mode	Currently set working mode Self-consumption mode Back-up mode Feed-in priority mode
D	Time-based control	The time-based control function is enabled.
E	Parallel	Number of parallel inverters
F	Log	History log
G	Setting	Setting page
H	Solar icon and the present power	Tap the icon to view the solar energy production. Note: When the '' icon appears at the top-right corner of the solar icon, it means that the AC coupling function is enabled.
I	Battery icon and the present power	Tap the icon to view the battery basic information and charge/discharge capacity.
J	Inverter icon and the present power	Tap the icon to view the inverter basic information.
K	Button	Tap the button to turn on/off the inverter.
L	Home icon and the present power	Tap the icon to view the load consumption. Note: When the '' icon appears at the top-right corner of the home icon, it means that he GEN Port works as an output port for the Smart Load connected to the GEN terminal.
M	Grid icon and the present power	Tap the icon to view the grid capacity and feed-in grid capacity.

7.2.2 Quick Setup

The quick setup is required when turnning on the inverter for the first time.

Step 1: Go to the quick setup page.

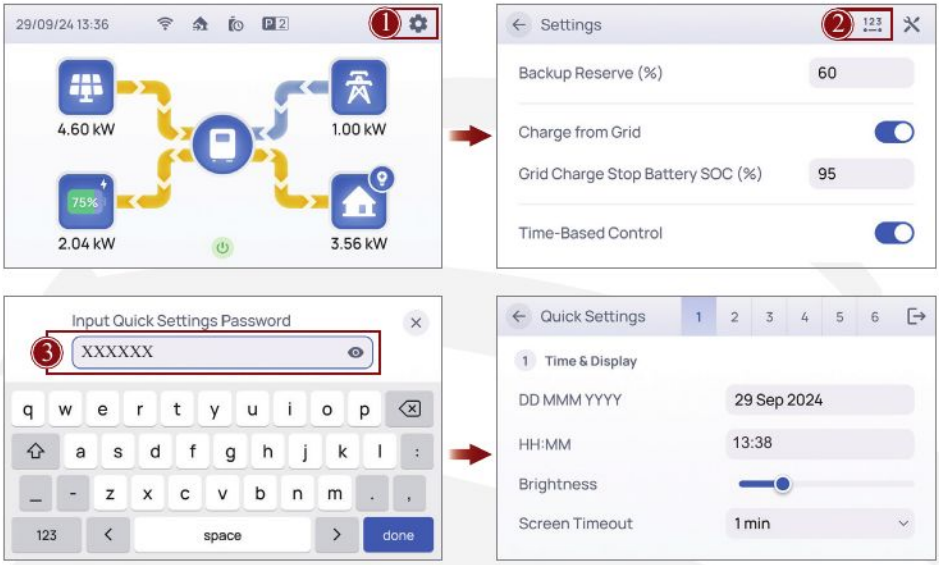

Step 2: Set the date, time and screen display.

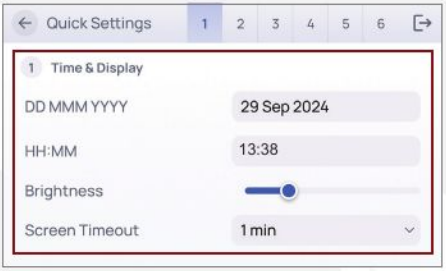

Step 3: Set grid parameters.

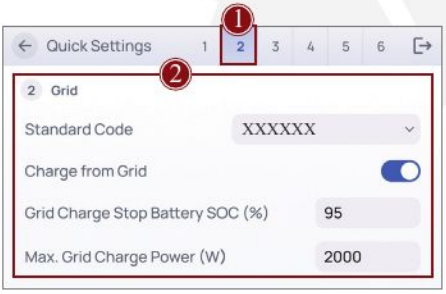

Step 4: Set power limit parameters.

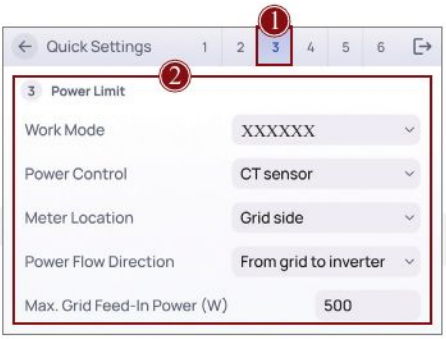

Step 5: Set battery parameters.

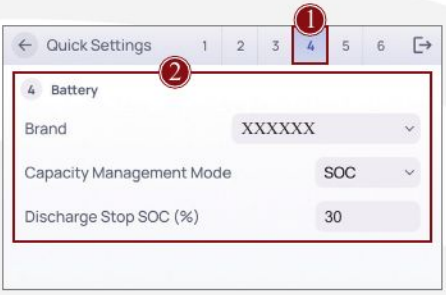

Step 6: Connect to a Wi-Fi hotspot with internet access.



Step 7: Tap the button to turn on the inverter.

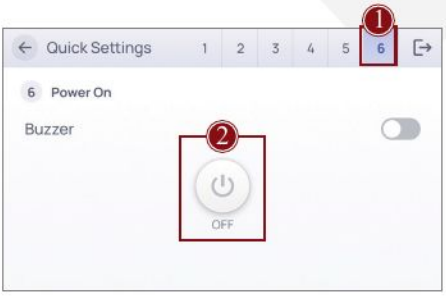

7.2.3 Graph

Tap any of the Solar/Grid/Inverter/Battery/Home icons, you can view the Production or Consumption data/graph and the basic information of your energy system.

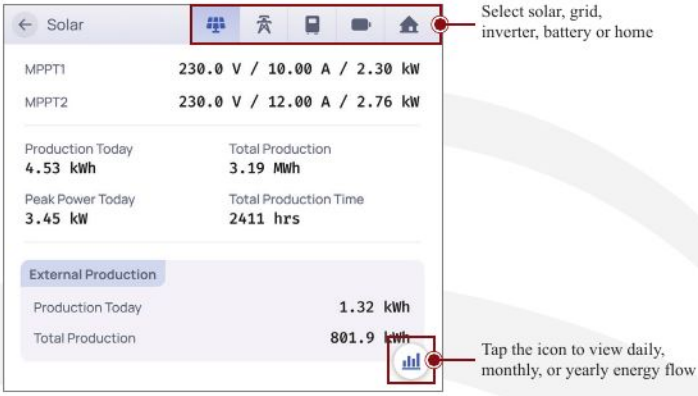

- **Query Day/Month/Year Data**

The energy graph is showed by Day, Month and Year. The daily data graph in the following figures are only for illustration.



Icon	Description
	Solar
	Grid
	Inverter
	Battery
	Home
	Pie chart
	Graph

Icon	Description
	Grid capacity
	Feed-in grid capacity
	Generator capacity
	Discharge capacity
	Charge capacity
	Toggle switch

7.2.4 Settings

In this page, you can select an administrator account or an end user to set or modify the parameters.

- **End User Setting**

  Tap the "⚙" to enter the Setting page. An end user account can configure some basic parameters including Backup Reserve, Grid Charging, Time-Based Control, Display and WLAN.

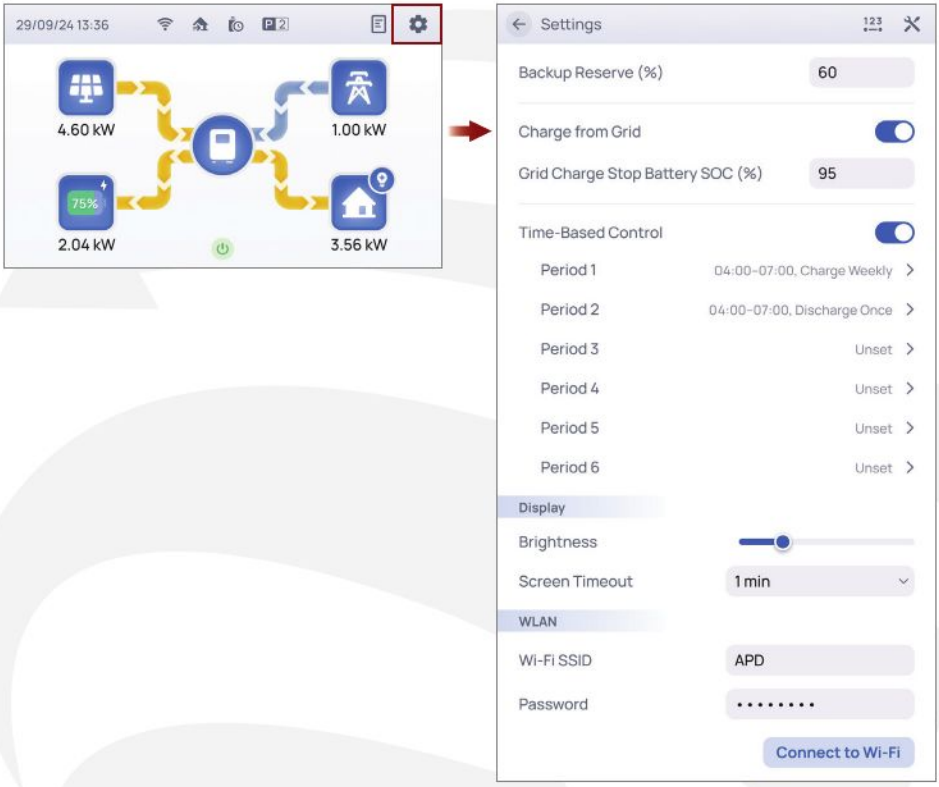

- **Administrator Setting**

  In **Setting** page, you can change your access level to an administrator account for advanced parameter settings.

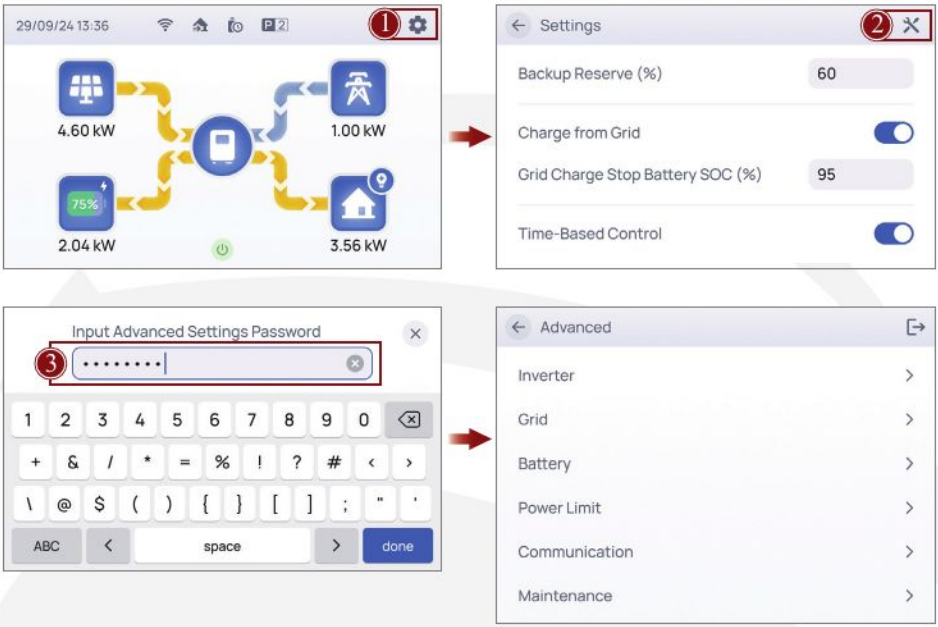

7.2.4.1 Inverter

In **Inverter** menu, you can configure the inverter, such as inverter work modes and battery work timesets, backup load port settings, generator port settings, and battery work timesets.

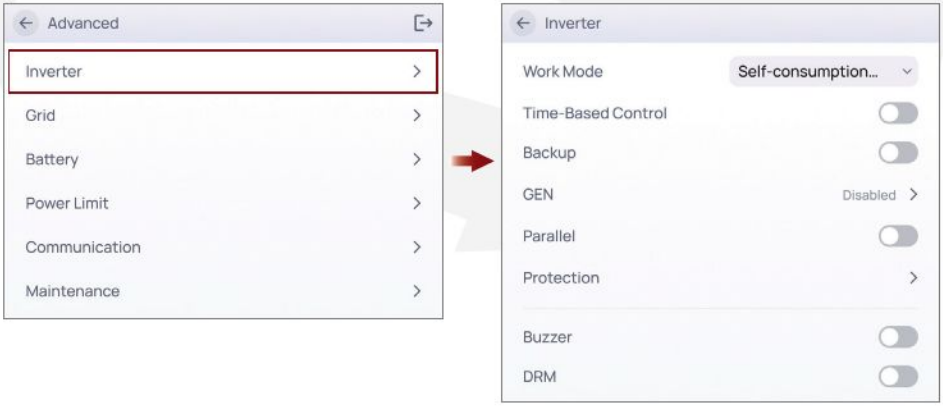

- **Work Mode**

Tap the **Work Mode**, there are several work modes are available.

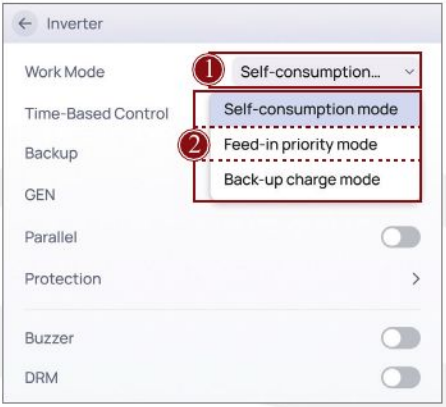

Parameter	Priority (PV Energy Consumption)
Self-consumption mode	Load > Battery > Grid
Feed-in Priority mode	Load > Grid > Battery
Back-up mode	Battery > Load > Grid

Note:

For details, please refer to the Inverter Working Mode chapter in the User Manual.

- **Time-based Control**

This function is designed to control the time setting of charging and discharging the inverter. You can set the following parameters based on your requirements:

- Start charging/discharging time: 00:00 to 23:59
- End charging/discharging time: 00:00 to 23:59
- Run cycle: once or every week
- Run date/day: the exact date

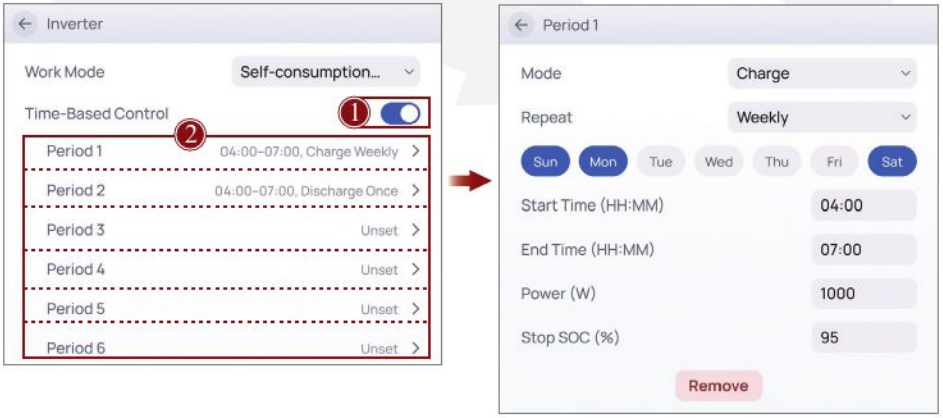

- **GEN**

➢ **Generator**

The GEN port works as an input port from the generator while under off-grid condition. The generator input can charge the battery or take the backup load. The generator has two start-stop ways, one is controlled by dry contact of inverter, the other is controlled by manual. For the former, the start and stop of the generator is completely controlled by the inverter. For the latter, the generator is started and stopped by manual control.

Note:

- If Generator and Grid are normal, preferably powered by Grid power.
- The generator capacity should be 1.3 times larger than the capacity of the hybrid inverter.
- You need to shut down the inverter to set the Generator.

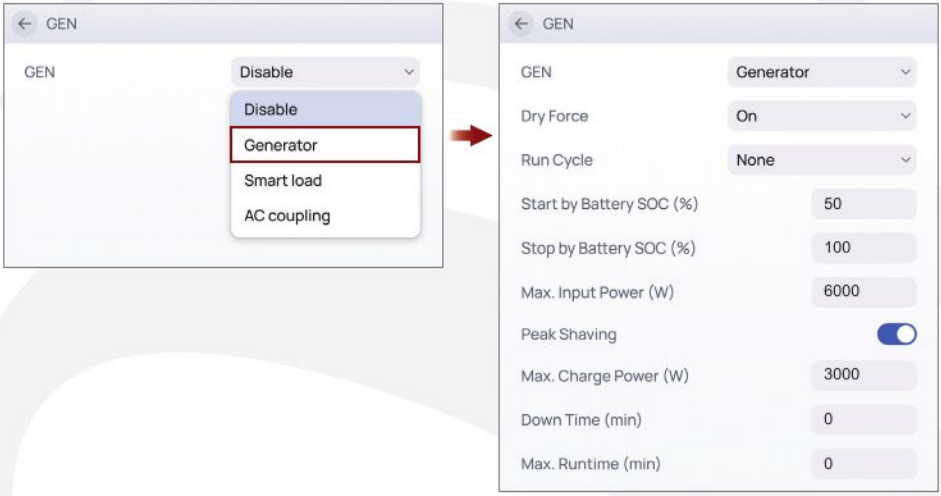

All parameters have been set by default.

Parameter	Description
Dry force	When the Grid power is abnormal, the generator is forced to be turned on.
Run Cycle	Generator cycle run mode. You can select Weekly or Monthly, which means the generator runs once a week or once a month.
Day of Week/Date	The generator will run on the set date.
Start Time (HH:MM)	The time at which the generator will start running on the set date.
End Time (HH:MM)	The time at which the generator will end its running on the set date.
Start by Battery SOC (%)	Battery SOC below which the generator starts to charge the battery. Meanwhile, the generator running time should not exceed the set maximum runtime (Min).
Stop by Battery SOC (%)	Battery SOC above which the generator stops charging the battery.

Parameter	Description
Max. Input Power (W)	Limit the generator input power below the set value (W).
Peak Shaving	When the Gen output power exceeds the set Gen shaving power, the inverter switches from the discharging state to the charging state.
Max. Charge Power (W)	Maximum battery charge power from generator.
Max. Runtime (min)	When the generator running time reaches to the setting value, the inverter will disconnect the input from generator. But the generator will keep working for a while defined by "Down Time (min)". **Note:** - "Max. Runtime (min) = 0" indicates that the generator's runtime is not subject to the "Max. Runtime" limitation.
Down Time (min)	When the inverter disconnect the input from generator, the generator will keep working for a while by the down time setting value (Min). - For generator that switch on and off by dry contact, it will stop working automatically when the generator working time reaches to the down time setting value (Min). - For generator that are manually switched on and off, it will stop working by manual regardless of the down time setting value (Min).
Start by Battery Voltage (%/V)	Battery voltage below which the generator starts to charge the battery. Meanwhile, the generator running time should not exceed the maximum runtime setting value (Min).
Stop by Battery Voltage (%/V)	Battery voltage above which the generator stops charging the battery.

Note:

- The total generator running time is equal to "Max. Runtime (min)" plus "Down Time (min)".
- Go to **Battery** > **Capacity Management Mode**, when you set Capacity Management Mode to voltage (V), parameter settings about **Start by Battery SOC (%)** will be changed to **Start by Battery voltage (V)**. Also, parameter settings about **Stop by Battery SOC (%)** will be changed to **Stop by Battery voltage (V)**.

Take the following parameter values as an example:
- Max. Input Power (W): 6000 W
- Max. Charge Power (W): 3000 W
- Start by Battery SOC (%): 50%
- Stop by Battery SOC (%): 100%
- Max. Runtime (min): 0 Min
- Down Time (min): 0 Min

And Capacity Management Mode was set to SOC (%), the situations are as follows:

- Under Off-Grid mode, the Generator will be ON or OFF depends on the battery SOC and Generator Max Runtime.
  - When the Battery SOC ≤ 50% and the Runtime is less than Max. Runtime (min), the GEN Port function will be enabled and the Generator will be ON.
  - When the Battery SOC ≥ 100% or the Runtime is over Max. Runtime (min), the GEN port function will be disabled and the Generator will be OFF.
- Under On-Grid mode, the GEN Port function will be disabled and the Generator will be OFF.

Note:

When the Capacity Management Mode was set to voltage, the generator still follows the above logic.

➢ **Smart Load**

The GEN Port works as an output port for the Smart Load.



All parameters have been set by default.

Parameter	Description
Min. PV Power with Smart Load On (W)	If the PV input power is higher than the setting value (Power), and the battery SOC exceeds the setting value simultaneously, the Smart Load will switch on.
Start by Battery SOC (%)	If the PV input power is higher than the setting value (Power), and the battery SOC exceeds the setting value simultaneously, the Smart Load will switch on.
Stop by Battery SOC (%)	If the battery SOC is lower than the setting value, the Smart Load will switch off .
Always On with Grid	When click "Always On with Grid" the Smart Load will switch on when the grid is present.

Parameter	Description
Start by Battery voltage (V)	If the battery voltage is higher than the setting value, and the PV input power exceeds the setting value (Power) simultaneously, the Smart Load will switch on.
Stop by Battery voltage (V)	If the battery voltage is lower than the setting value, the Smart Load will switch off.

Note:

Go to **Battery** > **Capacity Management Mode**, when you set Capacity Management Mode to voltage (V), parameter settings about **Start by Battery SOC (%)** will be changed to **Start by Battery voltage (V)**. Also, parameter settings about **Stop by Battery SOC (%)** will be changed to **Stop by Battery voltage (V)**.

Take the following parameter values as an example:

- Min. PV Power with Smart Load On (W): 500 W
- Start by Battery SOC (%): 100%
- Stop by Battery SOC (%): 80%

And Capacity Management Mode was selected to SOC (%), the situations are as follows:

- When **Always On with Grid** is **ON**, if the grid is present, the Smart Load will be ON all the time. It is not affected by the change of above parameters. If the grid is not present, the Smart Load output will be ON or OFF depends on the PV power and the battery SOC.
  - If the PV power ≥500W and the battery SOC ≥100% , the Smart Load output will be ON. In the state of Smart Load ON, if the battery SOC <80%, the Smart Load will be OFF.
  - If the PV power <500W or the battery SOC <80%, the Smart Load output will be OFF.
- When **Always On with Grid** is **OFF**.
  - If the PV power ≥ 500W and the Battery SOC ≥ 100%, the GEN Port function will be enabled and the Smart Load will be ON. In the state of Smart Load ON, if the battery SOC <80%, the Smart Load will be OFF.
  - If the PV power <500W or the Battery SOC <80%, the GEN Port function will be disabled and the Smart Load will be OFF.

Note:

When the Capacity Management Mode was set to voltage, the Smart Load Output still follows the above logic.

➢ AC Coupling

AC Coupling Mode: Under this mode, the GEN Port works as an input port from other grid-tied inverter whose rated power should be less than the hybrid inverter. The grid-tied inverter should also support derating output power according to the output frequency.

Note:

The capacity of grid-tied inverter should be less than that of hybrid inverter.



All parameters have been set by default.

Parameter	Description
Start by Battery SOC (%)	If battery SOC is lower than the default value, the inverter powers on and starts charging the battery.
Stop by Battery SOC (%)	If battery SOC is higher than the default value, the inverter powers off and stops charging the battery.
AC Couple High Frequency (Hz)	This parameter is used to limit the output power of grid-tied inverter when the hybrid inverter works under off-grid mode. As the battery SOC reaches gradually to the setting value (Off), during the process, the grid-tied inverter output power will decrease linear. When the battery SOC is equal to the setting value (Off), the system frequency will become the setting value (AC Couple Frequency high) and the grid-tied inverter will stop working.
Start by Battery Voltage (V)	If battery voltage is lower than the setting value, the inverter powers on and starts charging the battery.
Stop by Battery Voltage (V)	If battery voltage is higher than the setting value, the inverter powers off and stops charging the battery.

Note:

Go to **Battery** > **Capacity Management Mode**, when you set Capacity Management Mode to voltage (V), parameter settings about **Start by Battery SOC (%)** will be changed to **Start by Battery voltage (V)**. Also, parameter settings about **Stop by Battery SOC (%)** will be changed to **Stop by Battery voltage (V)**.

Take the following parameter values as an example:

- Start by Battery SOC (%): 80 %
- Stop by Battery SOC (%): 100%
- AC Couple High Frequency (Hz): 52 Hz

And Capacity Management Mode was set to SOC (%), the situations are as follows:

- Under off-grid mode, the AC coupling will be ON or OFF depends on the battery SOC.
  - When the Battery SOC ≤ 80%, the GEN port function will be enabled and AC coupling will be ON.
  - When the battery charge power lower than the grid-tied inverter output power, the hybrid inverter will increase the output frequency to maximum 52Hz. Then the grid-tied inverter will work in limited power mode.
- When the Battery SOC ≥ 100%, the GEN port function will be disabled and AC coupling will be OFF. Under on-grid mode, the grid-tied inverter works as normal regardless of battery capacity.

Note:

When the Capacity Management Mode was set to voltage, the AC coupling still follows the above logic

➢ **Logic Diagram of Start/Stop Smart Load/Generator/AC Coupling Port Function.**

Note:

The parameter values in the following figure are examples only, please set the parameter values according to the actual situation.

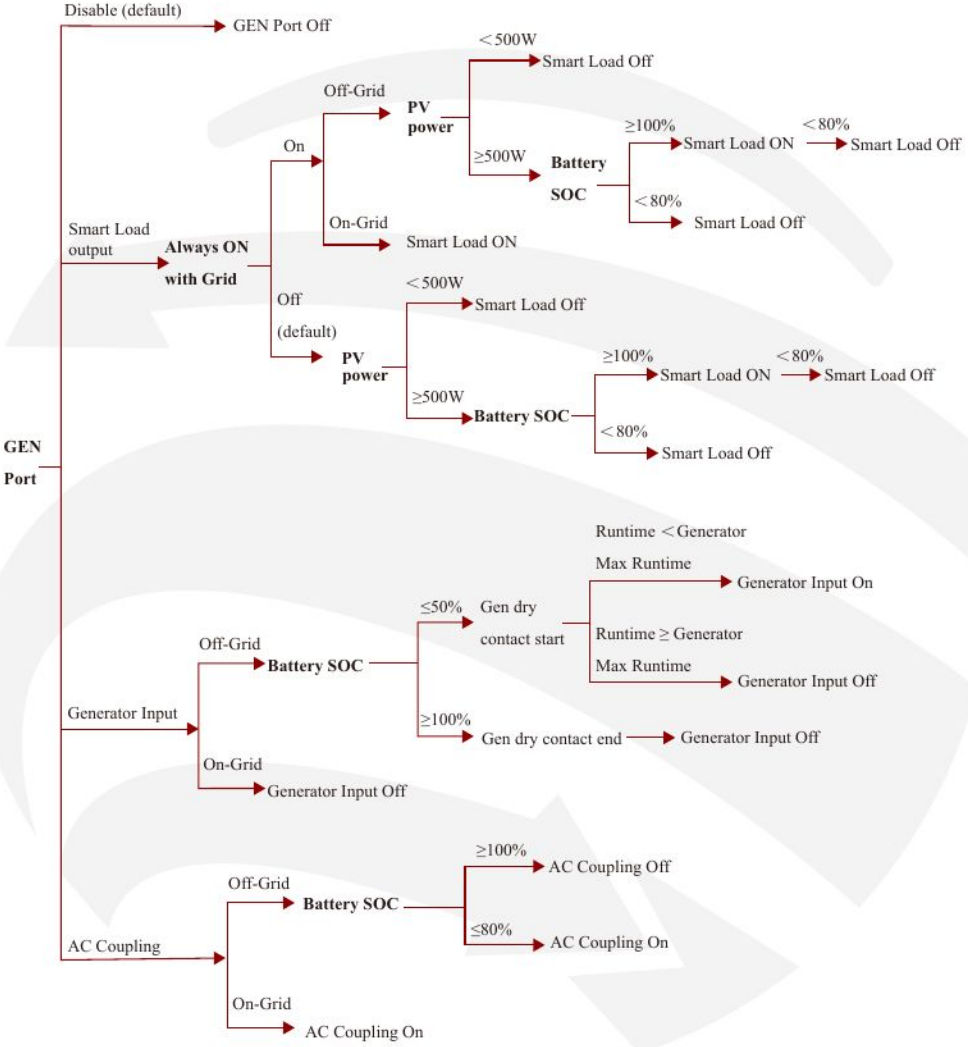

7.2.4.2 Grid

In **Inverter** menu, you can set or change the grid parameters.

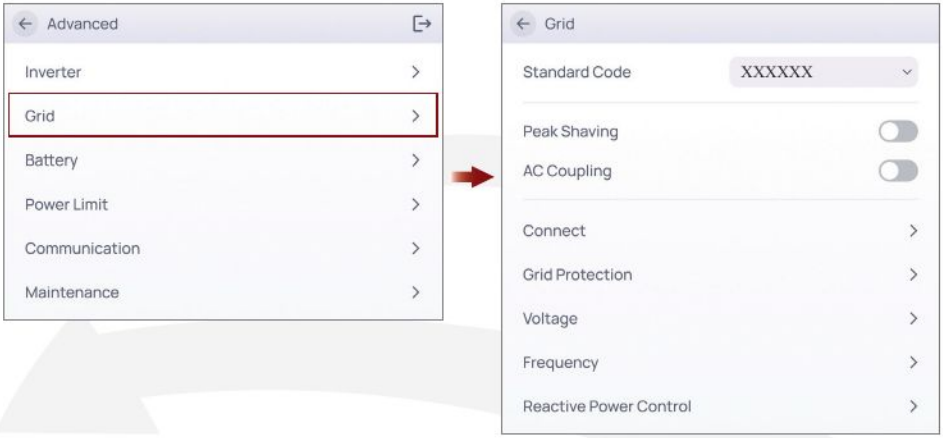

7.2.4.3 Battery

In **Battery** menu, you can set or change the Battery parameters.

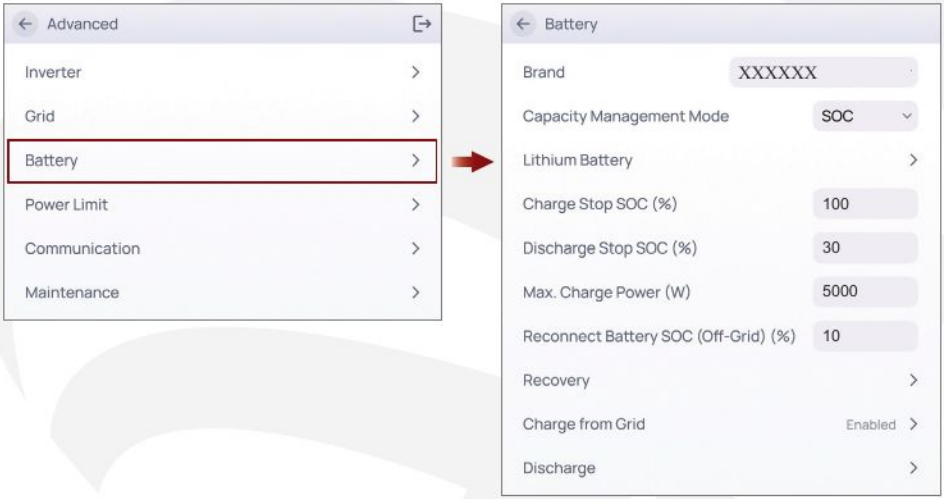

7.2.4.4 Power Limit

In **Power Limit** menu, you can configure the device's power settings, such as energy meter settings, energy flows, and energy export management.

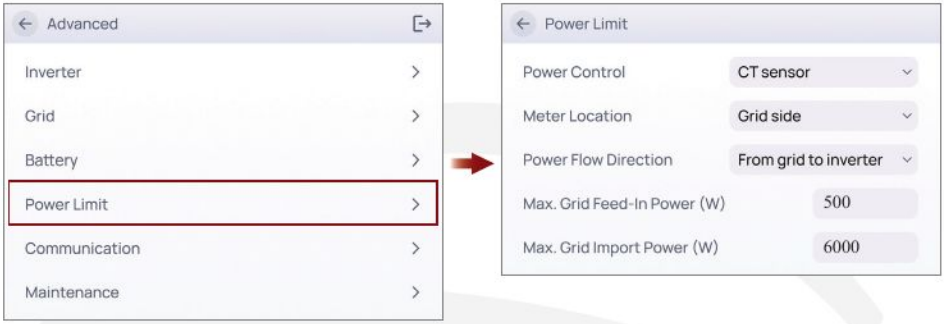

7.2.4.5 Communication

In **Communication** menu, you can you can set or change the parameters of communication settings: WiFi Setting, LAN Setting, RS485 Setting.



7.2.4.6 Maintenance

In **Maintenance** menu, you can turn on/off the inverter, set display, change password, delete all usage data and restore the device to factory condition.

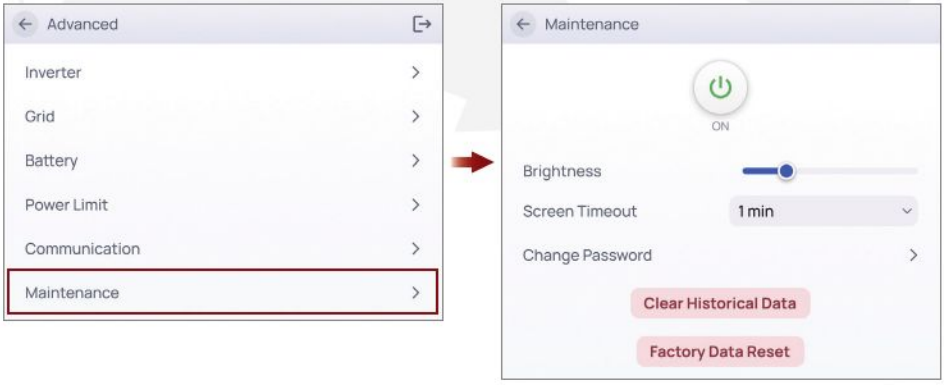

7.3 App

The app supports "Remote Access" and "Local Access".

- Remote Access: The app reads data from cloud server through API and display inverter parameters.
- Local Access: The app reads data from inverter through Bluetooth connection with Modbus protocol to display and configure inverter parameters.

There are two ways to download the app:

- Scan the QR code on the inverter to download the app.
- Download the app from the App Store or Google Play.

For more details, please refer to the **App User Manual**.

8. Maintenance

⚠ CAUTION	Before maintaining and commissioning inverter and its peripheral distribution unit, switch off all the charged terminals of the inverter and wait at least 10 minutes after the inverter is powered off.

8.1 Routine Maintenance

Items	Check Content	Maintain Content	Maintenance Interval
Inverter output status	Statistically maintain the status of electrical yield, and remotely monitor its abnormal status.	N/A	Weekly
Inverter cleaning	Check periodically that the heat sink is free from dust and blockage.	Clean the heat sink periodically.	Yearly
Inverter running status	Check that the inverter is not damaged or deformed. Check for normal sound emitted during inverter operation. Check and ensure that all inverter communication is running well.	If there is any abnormal phenomenon, replace the relevant parts.	Monthly
Inverter electrical connections	Check that all AC, DC and communication cables are securely connected; Check that PGND cables are securely connected; Check that all cables are intact and free from aging.	If there is any abnormal phenomenon, replace the cable or re-connect it.	Semiannually

8.2 Inverter Troubleshooting

When the inverter has an exception, its basic common warning and exception handling methods are shown below.

Code	Alarm Information	Suggestions
A0	Grid over voltage	1. If the alarm occurs occasionally, possibly the power grid voltage is abnormal temporarily, and no action is required. 2. If the alarm occurs repeatedly, contact the local power station. After receiving approval of the local power bureau, revise the electrical protection parameter settings on the inverter through the App. 3. If the alarm persists for a long time, check whether the AC circuit breaker /AC terminals is disconnected, or if the grid has a power outage.
A1	Grid under voltage	
A3	Grid over frequency	
A4	Grid under frequency	
A2	Grid absent	Wait till power is restored.

Code	Alarm Information	Suggestions
B0	PV over voltage	Check whether the maximum input voltage of a single PV string exceeds the MPPT working voltage. If yes, modify the number of PV module connection strings.
B1	PV insulation abnormal	1. Check the insulation resistance against the ground for the PV strings. If a short circuit has occurred, rectify the fault. 2. If the insulation resistance against the ground is less than the default value in a rainy environment, set insulation resistance protection on the App.
B2	Leakage current abnormal	1. If the alarm occurs occasionally, the inverter can be automatically recovered to the normal operating status after the fault is rectified. 2. If the alarm occurs repeatedly, contact your dealer for technical support.
B4	PV under voltage	1. If the alarm occurs occasionally, possibly the external circuits are abnormal accidentally. The inverter automatically recovers to the normal operating status after the fault is rectified. 2. If the alarm occurs repeatedly or last a long time, check whether the insulation resistance against the ground of PV strings is too low.
B7	PV string reverse	Check and modify the positive and negative polarity of the input of the circuit string.
C0	Internal power supply abnormal	1. If the alarm occurs occasionally, the inverter can be automatically restored, and no action is required. 2. If the alarm occurs repeatedly, please contact the customer service.
C2	Inverter over dc-bias current	1. If the alarm occurs occasionally, possibly the power grid voltage is abnormal temporarily, and no action is required. 2. If the alarm occurs repeatedly, and the inverter fails to generate power, contact the customer service
C3	Inverter relay abnormal	1. If the alarm occurs occasionally, possibly the power grid voltage is abnormal temporarily, and no action is required. 2. If the alarm occurs repeatedly, pls. refer to the suggestions or measures of Grid over voltage. If the inverter fails to generate power, contact the customer service center. If there is no abnormality on the grid side, the machine fault can be determined. (If you open the cover and find traces of damage to the relay, it can be concluded that the machine is faulty.) And pls. contact the customer service.

Code	Alarm Information	Suggestions
CN	Remote off	1. Local manual shutdown is performed in App. 2. The monitor executed the remote shutdown instruction. 3. Remove the communication module and confirm whether the alarm disappears. If yes, replace the communication module. Otherwise, please contact the customer service.
C5	Inverter over temperature	1. If the alarm occurs occasionally, the inverter can be automatically recovered. No action is required. 2. If the alarm occurs repeatedly, please check whether the installation site has direct sunlight, bad ventilation, or high ambient temperature (such as installed on the parapet). Yet, if the ambient temperature is lower than 45° C and the heat dissipation and ventilation is good, please contact customer service.
C6	GFCI abnormal	1. If the alarm occurs occasionally, it could have been an occasional exception to the external wiring. The inverter can be automatically recovered. No action is required. 2. If it occurs repeatedly or cannot be recovered for a long time, please contact customer service.
C8	Fan abnormal	1. If the alarm occurs occasionally, pls. restart the inverter. 2. If it occurs repeatedly or cannot be recovered for a long time, check whether the external fan is blocked by foreign objects. Otherwise, contact customer service.
C9	DC link unbalance or under voltage	Batteries exceeded their current discharge limit.
CA	Dc-link over voltage	1. If the alarm occurs occasionally, the inverter can be automatically recovered and no action is required. 2. If the alarm occurs repeatedly, the inverter cannot work properly. Pls. contact the customer service center.
CB	Internal communication error	1. If the alarm occurs occasionally, the inverter can be automatically recovered and no action is required. 2. If the alarm occurs repeatedly, the inverter cannot work properly. Pls. contact the customer service center.
CC	Software incompatibility	1. If the alarm occurs occasionally, the inverter can be automatically recovered and no action is required. 2. If the alarm occurs repeatedly, the inverter cannot work properly. Pls. contact the customer service center.

Code	Alarm Information	Suggestions
CD	Internal storage error	1. If the alarm occurs occasionally, the inverter can be automatically recovered and no action is required. 2. If the alarm occurs repeatedly, the inverter cannot work properly. Pls. contact the customer service center.
CE	Data inconsistency	1. If the alarm occurs occasionally, the inverter can be automatically recovered and no action is required. 2. If the alarm occurs repeatedly, the inverter cannot work properly. Pls. contact the customer service center.
CF	Inverter abnormal	1. If the alarm occurs occasionally, the inverter can be automatically recovered and no action is required. 2. If the alarm occurs repeatedly, the inverter cannot work properly. Pls. contact the customer service center.
CG	Boost abnormal	1. If the alarm occurs occasionally, the inverter can be automatically recovered and no action is required. 2. If the alarm occurs repeatedly, the inverter cannot work properly. Pls. contact the customer service center.
CJ	Meter lost	1. Check the meter parameter Settings 2. Local App checks that the communication address of the inverter is consistent with that of the electricity meter 3. The communication line is connected incorrectly or in bad contact 4. electricity meter failure. 5. Exclude the above, if the alarm continues to occur, please contact the customer service center.
P1	Parallel ID warning	It is Parallel ID Alarm. Pls. check the parallel communication cable, and check whether any inverter joins or exits online. All inverters are powered off completely, check the line, and then power on the inverters again to ensure that the alarm is cleared.
P2	Parallel SYN signal warning	Parallel synchronization signal is abnormal. Check whether the parallel communication cable is properly connected.
P3	Parallel BAT abnormal	The parallel battery is abnormal. Whether the battery of the inverter is reported low voltage or the battery is not connected.
P4	Parallel GRID abnormal	The parallel grid is abnormal. Whether the grid of the inverter is abnormal.

Code	Alarm Information	Suggestions
P5	Phase Sequence abnormal	Ensure that the phase sequence of power grid is consistent with that of L1/L2/L3 on App. To clear phase sequence abnormal alarm: Option 1: Power off all inverters, correct the phase sequence of each inverter and then restart the inverters. Option 2: Under inverter standby mode, correct the phase sequence of each inverter on App, power off all inverters and then restart the inverters. If the alarm continues, please contact the customer service center.
D2	Battery over voltage	1. If the alarm occurs occasionally, the inverter can be automatically recovered and no action is required. 2. Check that the battery overvoltage protection value is improperly set. 3. The battery is abnormal. 4. If exclude the above, the alarm continues to occur, please contact the customer service center.
D3	Battery under voltage	1. If the alarm occurs occasionally, the inverter can be automatically recovered and no action is required. 2. Check the communication line connection between BMS and inverter (lithium battery). 3. The battery is empty or the battery voltage is lower than the SOC cutoff voltage. 4. The battery undervoltage protection value is improperly set. 5. The battery is abnormal. 6. If exclude the above, the alarm continues to occur, please contact the customer service center.
D4	Battery discharger over current	1. Check whether the battery parameters are correctly set. 2. Battery undervoltage. 3. Check whether a separate battery is loaded and the discharge current exceeds the battery specifications. 4. The battery is abnormal. 5. If exclude the above, the alarm continues to occur, please contact the customer service center.
D5	Battery over temperature	1. If the alarm occurs repeatedly, please check whether the installation site is in direct sunlight and whether the ambient temperature is too high (such as in a closed room). 2. If the battery is abnormal, replace it with a new one. 3. If exclude the above, the alarm continues to occur, please contact the customer service center.
D6	Battery under temperature	

Code	Alarm Information	Suggestions
D7	AC output voltage abnormal	1. Check whether the AC OUTPUT voltage and frequency Settings are within the specified range. 2. Check whether the AC OUTPUT circuit is overloaded. 3. When not connected to the power grid, check whether AC OUTPUT voltage is normal. 4. If exclude the above, the alarm continues to occur, please contact the customer service center.
D8	Communication error (Inverter-BMS)	1. Check whether the battery is disconnected. 2. Check whether the battery is properly connected with the inverter. 3. Confirm that the battery is compatible with the inverter. It is recommended to use CAN communication. 4. Check whether the communication cable or port between the battery and the inverter is faulty. 5. If exclude the above, the alarm continues to occur, please contact the customer service center.
D9	Internal communication loss(E-M)	1. Check whether the communication cables between AC OUTPUT, electricity meter and inverter are well connected and whether the wiring is correct (European units only). 2. Check whether the communication distance is within the specification range 3. Disconnect the external communication and restart the electricity meter and inverter. 4. If exclude the above, the alarm continues to occur, please contact the customer service center.
DA	Internal communication loss(M-D)	
CU	Dcdc abnormal	1. If the alarm occurs occasionally, the inverter can be automatically recovered and no action is required. 2. If the alarm occurs repeatedly, please check: 1) Check whether the MC4 terminal on the PV side is securely connected. 2) Check whether the voltage at the PV side is open circuit, ground to ground, etc. If exclude the above, the alarm continues to occur, please contact the customer service center.
CP	AC output over dc-bias voltage	1. If the alarm occurs occasionally, the inverter can be automatically recovered and no action is required. 2. If the alarm occurs repeatedly, the inverter cannot work properly. Pls. contact the customer service center.

Code	Alarm Information	Suggestions
DB	AC output short circuit	1. Check whether the live line and neutral line of AC OUTPUT are short-circuited. 2. If it is confirmed that the output is not short-circuited or an alarm, please contact customer service to report for repair. (After the troubleshooting of alarm problems, AC OUTPUT breaker needs to be manually turned on during normal use.)
DC	AC output over load	1.Disconnect the AC OUTPUT breaker and check whether the alarm is cleared. 2.If the load is disconnected and the alarm is generated, please contact the customer service. (After the alarm is cleared, the AC OUT breaker needs to be manually turned on for normal use.)
DO	Meter 2 lost or device communication loss	1. Check the meter parameter Settings 2. Local App checks that the communication address of the inverter is consistent with that of the electricity meter 3. The communication line is connected incorrectly or in bad contact 4. electricity meter failure. 5. Exclude the above, if the alarm continues to occur, please contact the customer service center.

8.3 Removing the Inverter

WARNING	Before removing DC input connector, double check DC input switch is turned to OFF to avoid inverter damage and personal injury.

Perform the following procedures to remove the inverter:

1. Disconnect all cables from the inverter, including communications cables, DC input power cables, AC output power cables, and PGND cable.
2. Remove the inverter from the mounting bracket.
3. Remove the mounting bracket.

9. Technical Specifications

Model	6K	8K	10K	12K	15K	20K
Input (PV)						
Max. PV Access Power	25000W		40000W			
Max. PV Usable Power	20000W		30000W			
Max. PV Input Voltage	1000V					
Start-up Voltage	120V					
MPPT Operating Voltage Range	160V-980V					
PV Rated voltage [VDC]	650V					
Max. Input Current per MPPT	20A/20A		20A/20A/20A			
Max. Short Circuit Current per MPPT	30A/30A		30A/30A/30A			
Nos. of MPPT	2		3			
String per MPPT	1/1		1/1/1			
Input/Output (BAT)						
Battery Type	Lithium-ion/Lead-acid					
No.of battery input	2*					
Battery rated voltage	48V					
Battery Voltage Range	40V-60V					
Max. Charge/Discharge Current	380A/150A	380A/200A	380A/250A	380A/300A	380A/350A	380A/380A
Max. Charge/Discharge Power	20000W/7200W	20000W/9600W	20000W/12000W	20000W/14500W	20000W/18000W	20000W/20000W
Output (Grid)						
Nominal AC Output Power	6000W	8000W	10000W	12000W	15000W	20000W
Max. AC Output Apparent Power	6600VA	8800VA	11000VA	13200VA	16500VA	22000VA
Nominal AC Output Current	3*9.1A/3*8.7A/ 3*8.3A	3*12.1A/3*11.6A/ 3*11.1A	3*15.2A/3*14.5A/ 3*13.9A	3*18.2A/3*17.4A/ 3*16.7A	3*22.7A/3*21.7A/ 3*20.8A	3*30.3A/3*29A/3*27.8A
Max. AC Output Current	3*10A	3*13.3A	3*16.7A	3*20A	3*25A	3*33.3A
Max. Single Phase Power	4300W	4300W	8500W	8500W	8500W	8500W
Max. Continuous AC Passthrough (grid to load)	45A					
Nominal Grid Voltage	220V/380V; 230V/400V, 240V/415V 3W+N+PE					
Nominal Grid Frequency	50Hz/60Hz					
Power Factor	> 0.99 @rated power (Adjustable 0.8 LD - 0.8 LG)					
THDi	<3% @rated power					
Output (Back up)						
Nominal AC Output Power	6000W	8000W	10000W	12000W	15000W	20000W
Max. AC Output Apparent Power	6600VA	8800VA	11000VA	13200VA	16500VA	22000VA
Nominal AC Output Current	3*9.1A/3*8.7A/ 3*8.3A	3*12.1A/3*11.6A/ 3*11.1A	3*15.2A/3*14.5A/ 3*13.9A	3*18.2A/3*17.4A/ 3*16.7A	3*22.7A/3*21.7A/ 3*20.8A	3*30.3A/3*29A/3*27.8A
Max. AC Output Current	3*10A	3*13.3A	3*16.7A	3*20A	3*25A	3*33.3A
Peak Output Apparent Power	1.2 times of rated power, 5min					
Peak Output Apparent Power （10s）	2 times of rated power, 10s					1.5 times of rated power, 10s
Nominal Grid Voltage	220V/380V; 230V/400V, 240V/415V 3W+N+PE					
Nominal Grid Frequency	50Hz/60Hz					
Transfer Time	<10ms					
THDV	<3% @100% R Load					

*No.of battery input: If only one set of terminals is used, the max battery charge/discharge will be limited to 190A.

Model	6K	8K	10K	12K	15K	20K
Input (Generator)						
Max. Input Power	30000W					
Rated Input Voltage	220V/380V; 230V/400V, 240V/415V					
Rated input frequency	50Hz/60Hz					
Protection						
Protection Category	Class I					
DC Switch	Yes					
Anti-islanding Protection	Yes					
AC Overcurrent Protection	Yes					
DC Reverse Protection	Yes					
DC/AC Overvoltage Protection	DC Type II, AC Type III					
Surge Arrester	DC Type II, AC Type II					
Insulation Resistance Detection	Yes					
Leakage Current Protection	Yes					
GFCI	Yes					
BAT Breaker	400A，Optional					
AFCI	Optional					
RSD	Optional					
General						
Max. Operation Altitude	4000m (>2000m derating)					
Ingress Protection Degree	IP65					
Operating Temperature Range	-25°C~60°C (>45°C derating)					
Relative Humidity	0~100%					
Cooling Method	Smart Cooling					
Mounting	Wall bracket					
Display	LED+LCD					
Communication	RS485/CAN (for BMS), RS485 (for Meter), DRMs, CAN（for parallel), 2*DO, 2*DI ,USB(for Wi-Fi/LAN,optional)					
Dimensions (W*H*D)	460mm*742mm*266mm					
Weight	50Kg					
Certification						
Safety	IEC/EN 62109-1/-2					
EMC	IEC/EN 61000-6-1/-2/-3/-4，IEC/EN 62920					
Warranty	5 Years/10 Years （optional）					

POWERING PROGRESS ACROSS THE GLOBE

3000+
Distributors

15+
Industries

60+
Countries & Region

24/7 Intelligent Assistance
Sales Support and
After Sales Support

250+
Product Categories & SKUs

Design
Innovative design shapes our products combining functionality, efficiency, and aesthetics to meet diverse global energy needs.

Globally Certified Excellence
Certified to meet global standards

One Stop Ecosystem
Complete digital ecosystem

20+
Years of Excellence

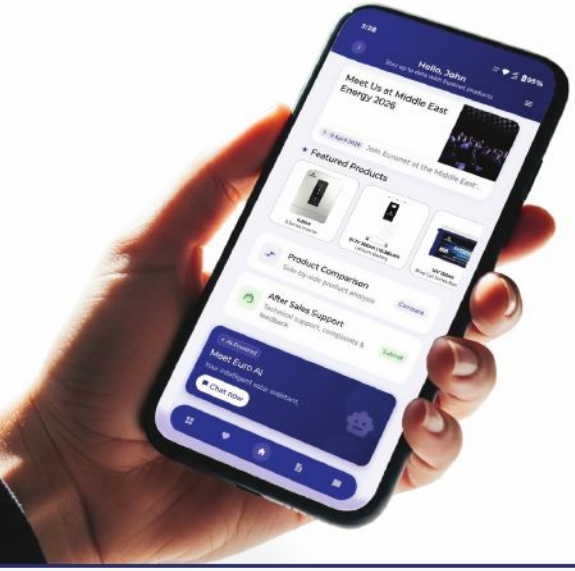

Download the myEuronet App

myEuronet is the official app for Euronet customers, distributors, installers, and partners, giving you instant access to Euronet's complete smart energy and technology ecosystem in one place. Explore product Catalogues, compare solutions, access detailed specifications, save products, and stay updated with the latest innovations across solar energy, batteries, power & electrical, security, surveillance, and IoT solutions anytime, anywhere.

Scan the QR Code to Download the App

Download on the App Store

GET IT ON Google Play

© 2026 Euronet Technologies LLC. All rights reserved.

ISO 9001:2015 Certified